建築物實施耐震能力評估及補強講習會

非線性歷時分析於耐震評估與消能補強之應用

廖文義

102年6月29日

NTUT
NCREE



報告內容

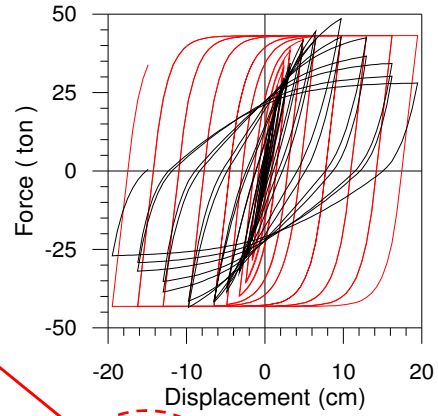
1. 由 FEMA440看側推分析與歷時分析
2. 非線性歷時分析範例
3. 消能補強分析



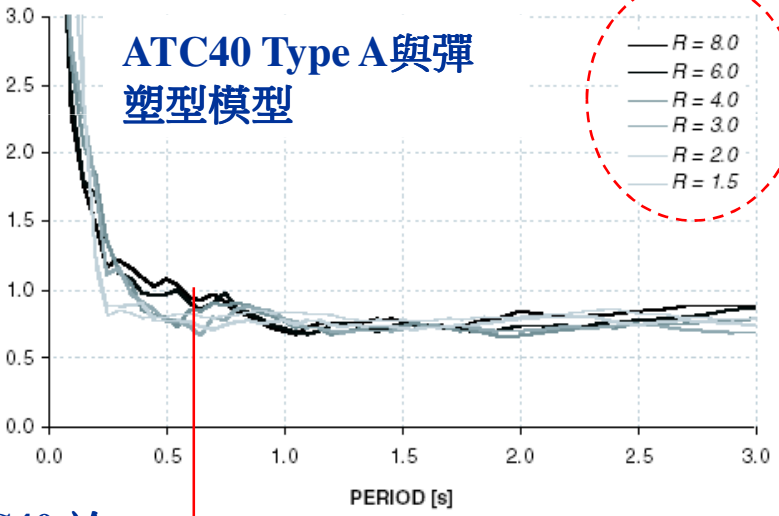
FEMA 440 (ATC55):位移誤差探討

R=彈性需求/降伏強度比

$$R = \frac{S_a}{V_y / W} C_m$$



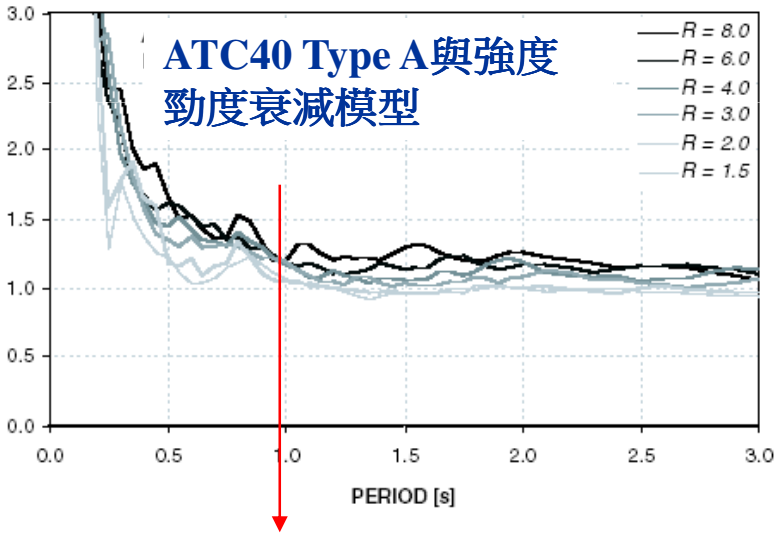
ATC40位移/歷時分析位移



ATC40 於 T<0.5s 平均高估約200%

ATC40 於T>0.6s 低估約25%

ATC40位移/歷時分析位移



ATC40 任何週期皆高估位移反應

NTUT
NCREE

FEMA 440 (ATC55):改良容量震譜法分析(1)

1. 有效阻尼(β_{eff})

2. 評估方法

For $\mu < 4.0$:

$$\beta_{\text{eff}} = A(\mu-1)^2 + B(\mu-1)^3 + \beta_0$$

For $4.0 \le \mu \le 6.5$:

$$\beta_{\text{eff}} = C + D(\mu-1) + \beta_0$$

For $\mu > 6.5$:

$$\beta_{\text{eff}} = E\left[\frac{F(\mu-1)-1}{F(\mu-1)^2}\right]\left(\frac{T_{\text{eff}}}{T_0}\right)^2 + \beta_0$$

3. 等效週期(T_{eff})

For $\mu < 4.0$:

$$T_{\text{eff}} = \left[G(\mu-1)^2 + H(\mu-1)^3 + 1\right]T_0$$

For $4.0 \le \mu \le 6.5$:

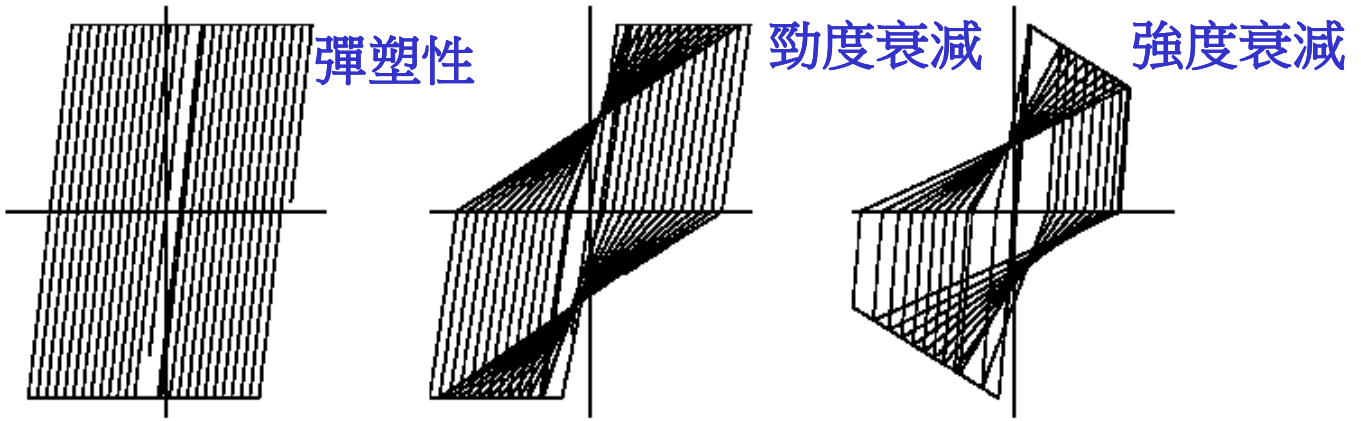
$$T_{\text{eff}} = \left[I + J(\mu-1) + 1\right]T_0$$

For $\mu > 6.5$:

$$T_{eff} = \left\{K\left[\sqrt{\frac{(\mu-1)}{1+L(\mu-2)}} - 1\right] + 1\right\}T_0$$



ATC55:改良容量震譜法分析(2)



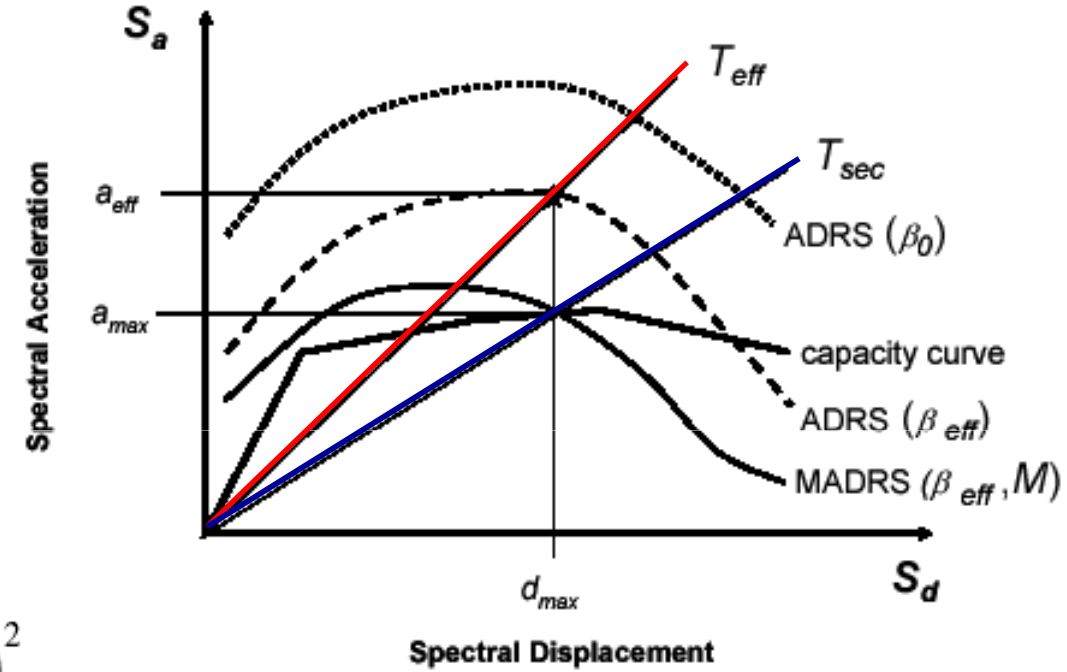
Model	*α (%)*	*A*	*B*	*C*	*D*	*E*	*F*
Bilinear hysteretic	0	3.2	–0.66	11	0.12	19	0.73
Bilinear hysteretic	2	3.3	–0.64	9.4	1.1	19	0.42
Bilinear hysteretic	5	4.2	–0.83	10	1.6	22	0.40
Bilinear hysteretic	10	5.1	–1.1	12	1.6	24	0.36
Bilinear hysteretic	20	4.6	–0.99	12	1.1	25	0.37
Stiffness degrading	0	5.1	–1.1	12	1.4	20	0.62
Stiffness degrading	2	5.3	–1.2	11	1.6	20	0.51
Stiffness degrading	5	5.6	–1.3	10	1.8	20	0.38
Stiffness degrading	10	5.3	–1.2	9.2	1.9	21	0.37
Stiffness degrading	20	4.6	–1.0	9.6	1.3	23	0.34
Strength degrading	–5[a]	5.6	–1.3	14	0.61	22	0.90
Strength degrading	-3[a]	5.3	–1.2	14	0.69	24	0.90

ATC55:改良容量震譜法分析(3)

$$M = \frac{a_{\text{eff}}}{a_{\max}}$$

$$\frac{T_{\text{sec}}}{T_0} = \sqrt{\frac{\mu}{1+\alpha(\mu-1)}}$$

$$M = \left(\frac{T_{\text{eff}}}{T_{\text{sec}}}\right)^2 = \left(\frac{T_{\text{eff}}}{T_0}\right)^2 \left(\frac{T_0}{T_{\text{sec}}}\right)^2$$



ATC55:改良容量震譜法分析(4)

步驟:

(1) 選擇設計反應譜(包括基礎組尼)

(2) 轉成ADRS格式

(3) 建立容量曲線及選擇初始性能點a_{pi}

(4) 建立等值雙線性模型及計算α

(5) 計算a_{pi}點之β_{eff}及T_{eff}

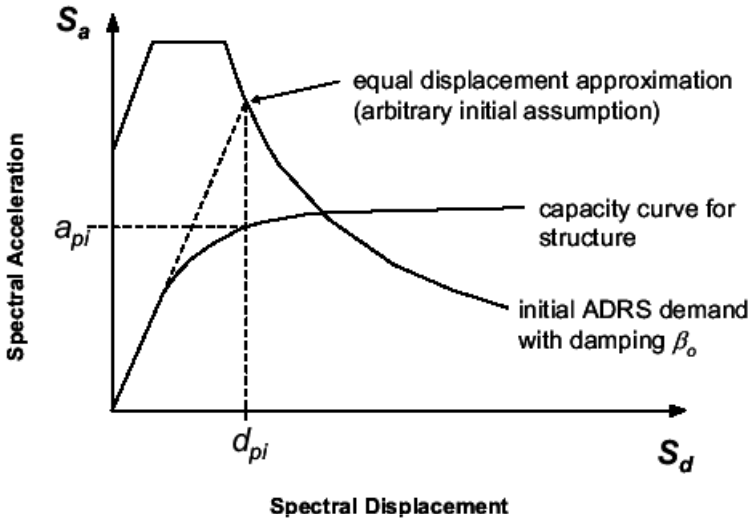
(6) 以β_{eff}折減ADRS

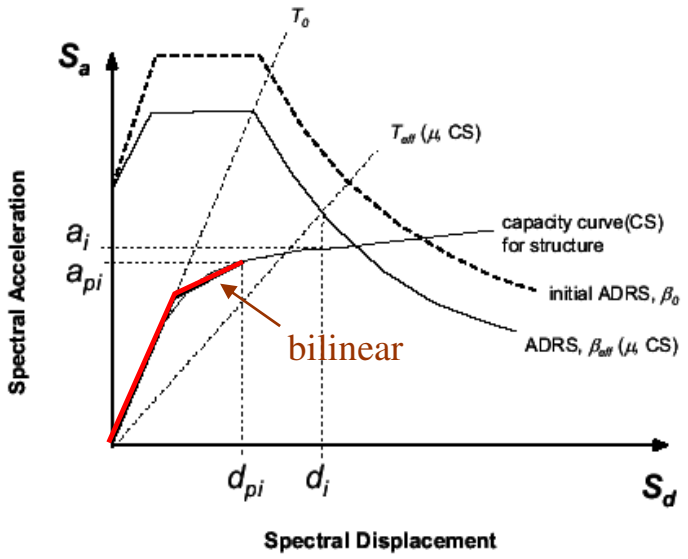
(7) 以T_{eff}決定位移d_i, 並與d_{pi}比較

$$\alpha = \frac{\left(\frac{a_{pi} - a_y}{d_{pi} - d_y}\right)}{\left(\frac{a_y}{d_y}\right)} \qquad \mu = \frac{d_{pi}}{d_y}$$

$$(S_a)_\beta = \frac{(S_a)_{5\%}}{B(\beta_{\text{eff}})}$$

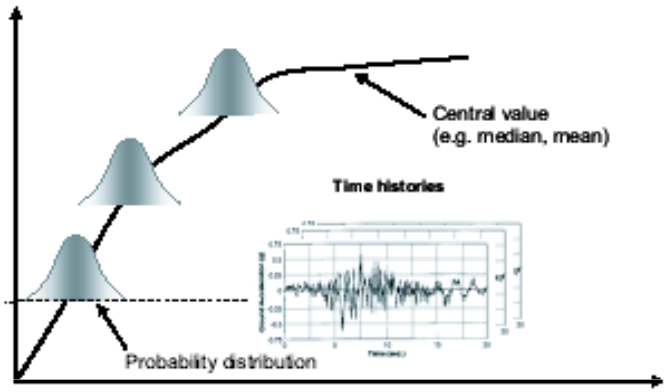
$$B = \frac{4}{5.6 - \ln \beta_{\text{eff}}\,(\text{in }\%)}$$



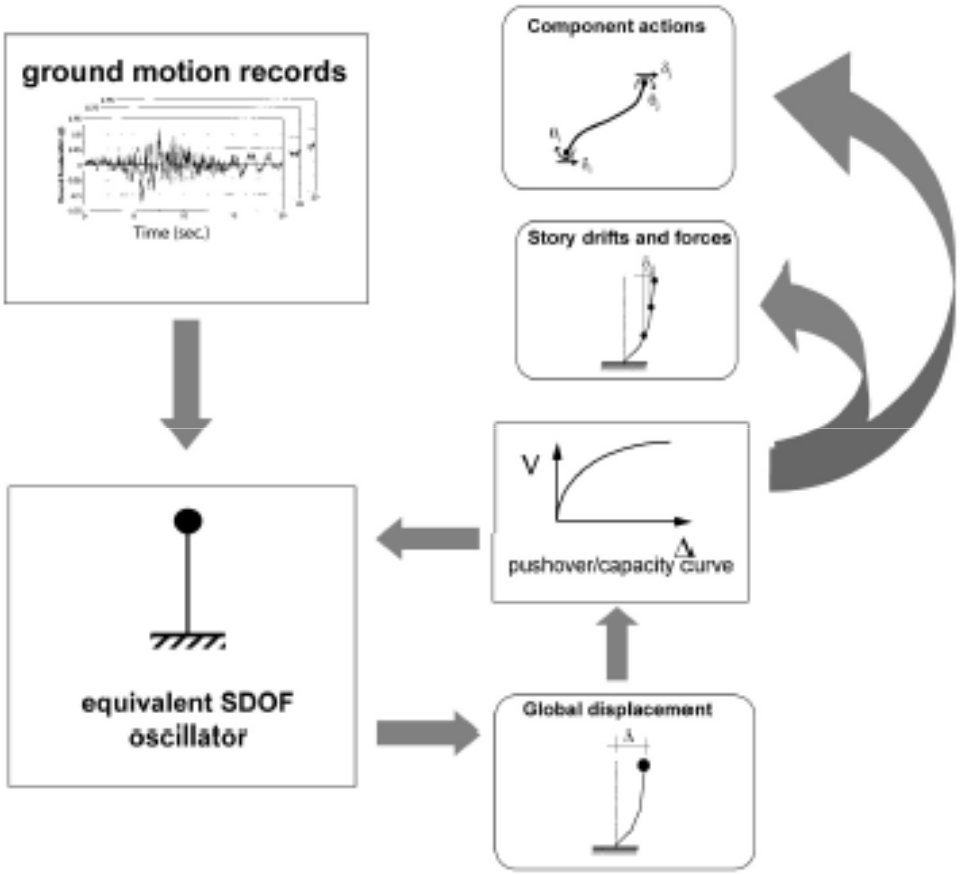


FEMA 440 (ATC55):單自由度系統

譜加速度



結構變位



進一步之考量:

1. 多自由度之影響
2. 地震與結構不確定性之考量

Nonlinear Time History Analysis

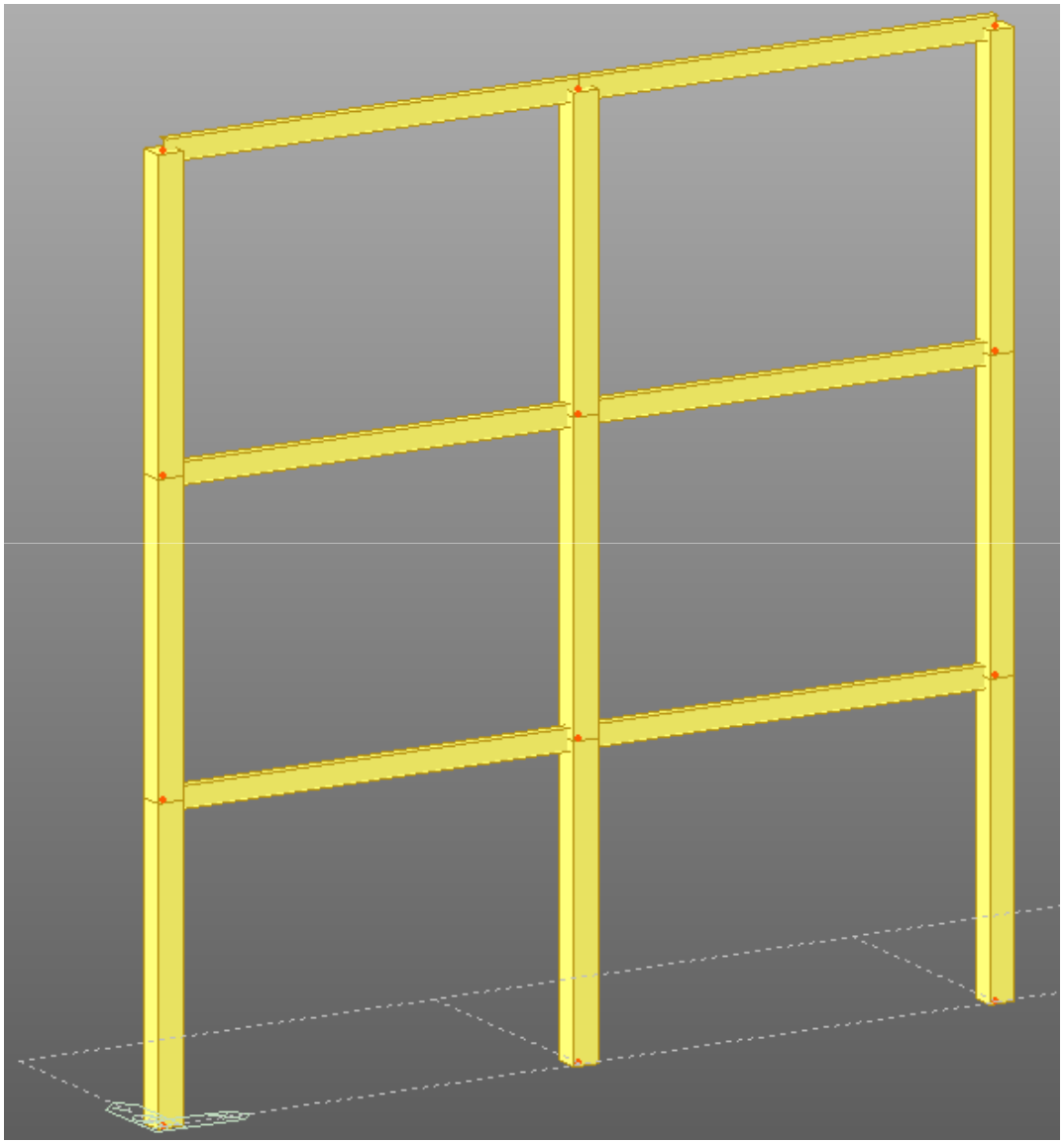


歷時分析之步驟

1. 建立結構模型
2. 設定桿件塑鉸(Kinematic hardening, Takeda, Wen,…)
3. 選擇地震歷時紀錄
4. 檢查結構整體層間變位(如小於2%), 及桿件使用韌性
5. 樓板加速度值



分析示範例



Steel Beam:

H 250x125x7.5x12.5

RC Column:

30x30; rebar 8#6

Nodal masses:

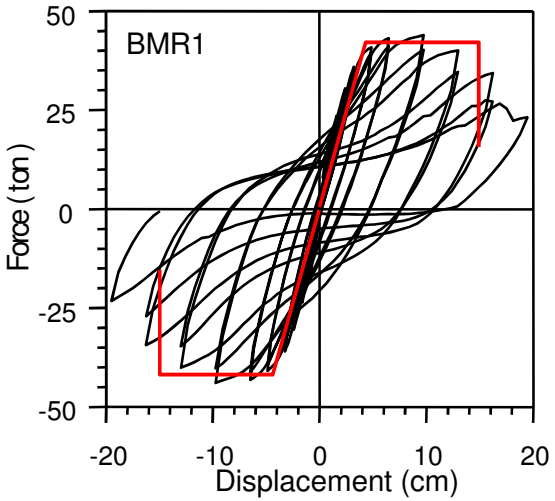
1 tf/g

周期= 1.15 sec

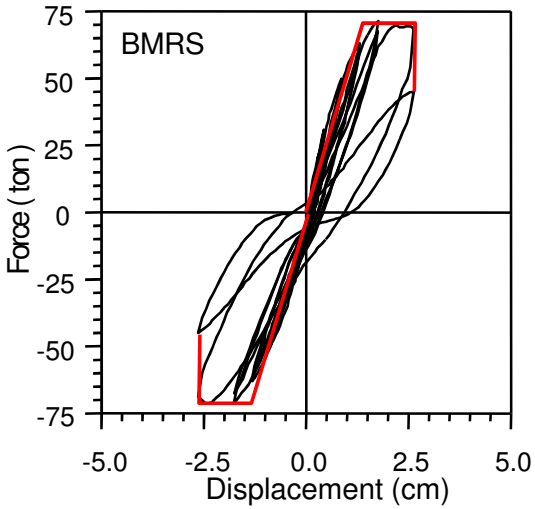
NTUT
NCREE

遲滯模型

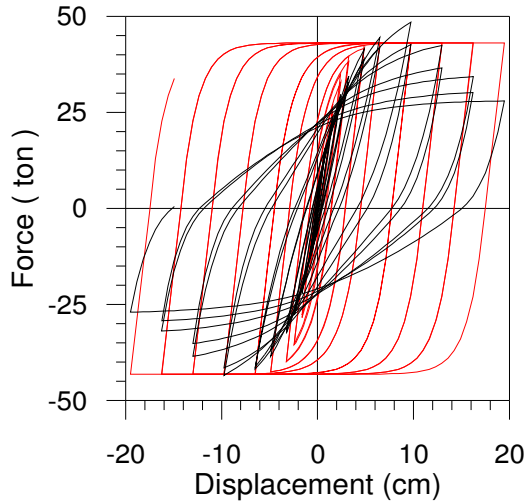
彎矩破壞



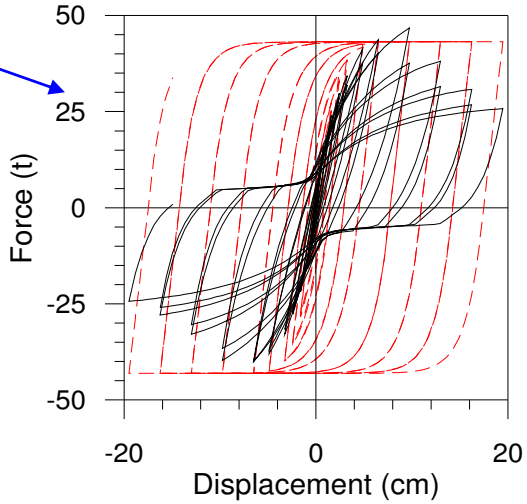
剪力破壞



勁度、強度衰減與擠壓模型



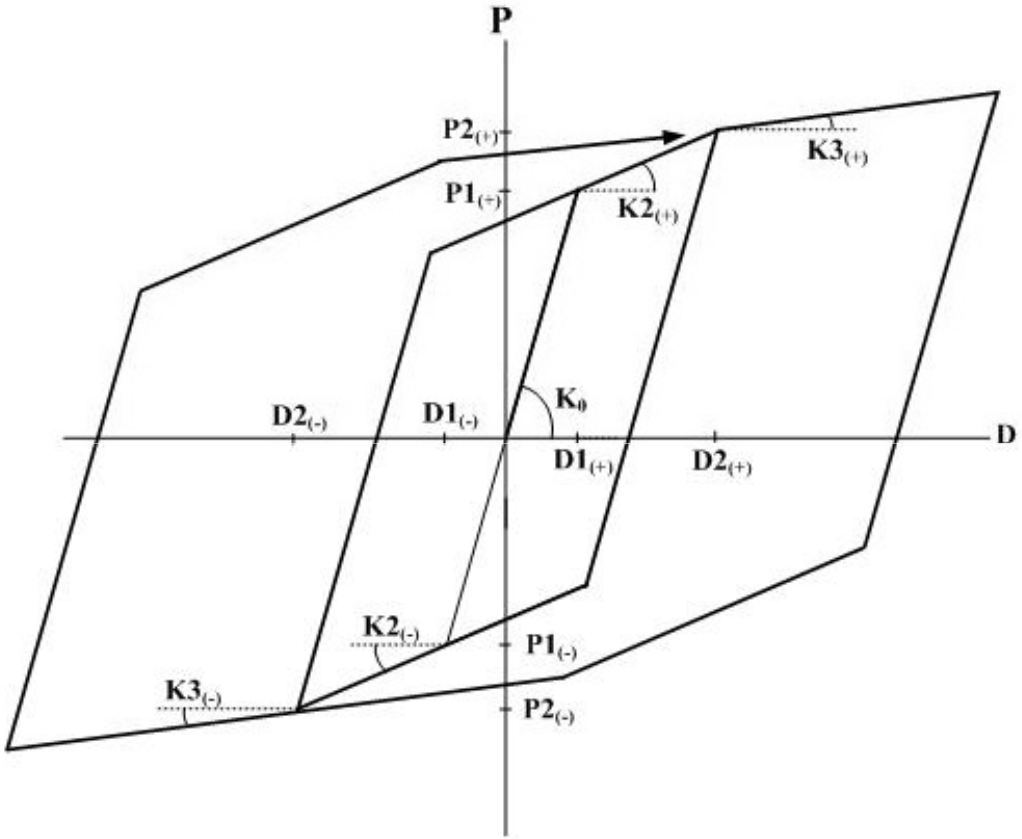
勁度、強度衰減模型



NTUT
NCREE

遲滯模型 (鋼梁彎矩塑鉸)

■ Kinematic hardening type hysteresis model



Kinematic Hardening hysteresis model

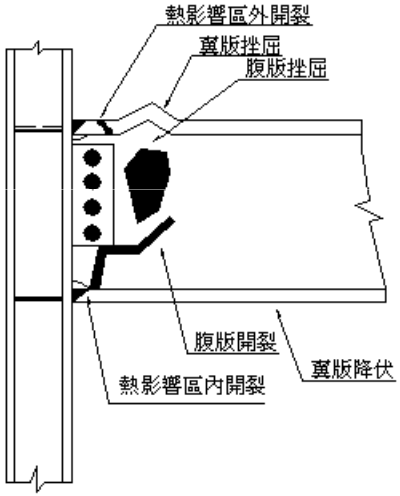
- Kinematic Hardening
- Origin-oriented
- Peak-oriented
- Clough
- Degrading Trilinear
- Takeda
- Takeda Tetralinear
- Modified Takeda
- Modified Takeda Tetralinear
- Normal Bilinear
- Elastic Bilinear
- Elastic Trilinear
- Elastic Tetralinear
- SLIP Bilinear
- SLIP Bilinear/Tension
- SLIP Bilinear/Compression
- SLIP Trilinear
- SLIP Trilinear/Tension
- SLIP Trilinear/Compression

Response points at the initial loading move along a trilinear skeleton curve. The unloading stiffness is identical to the elastic stiffness. It shows the tendency of strength increase with the increase in loading. This is used to model the Bauschinger effect of metallic materials. Accordingly, it is cautioned that energy dissipation may be overestimated for concrete. Due to the characteristic of the model, only the positive (+) and negative (-) symmetry is permitted for the strength reduction ratios after yielding.

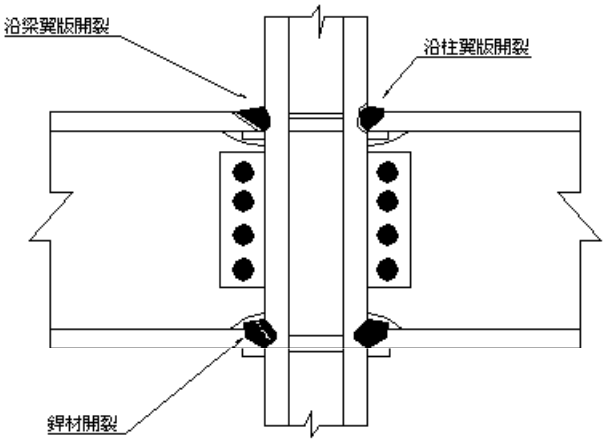
鋼結構模擬

=> 北嶺地震發現損壞多發生於翼板銲接-腹板栓接之抗彎接頭

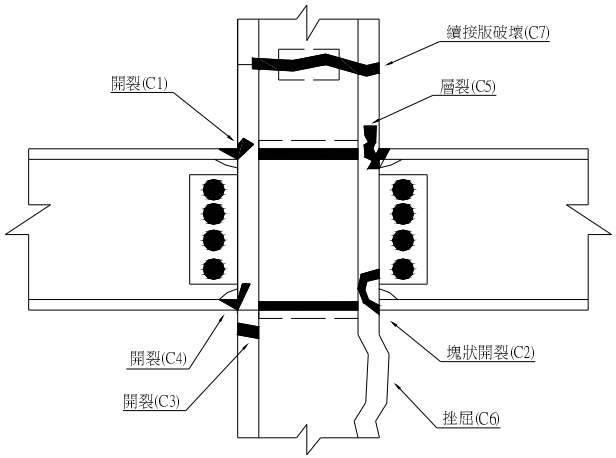
=> 結構之模擬方式(構材之強度與變形能力估算並不容易)



梁破壞模式



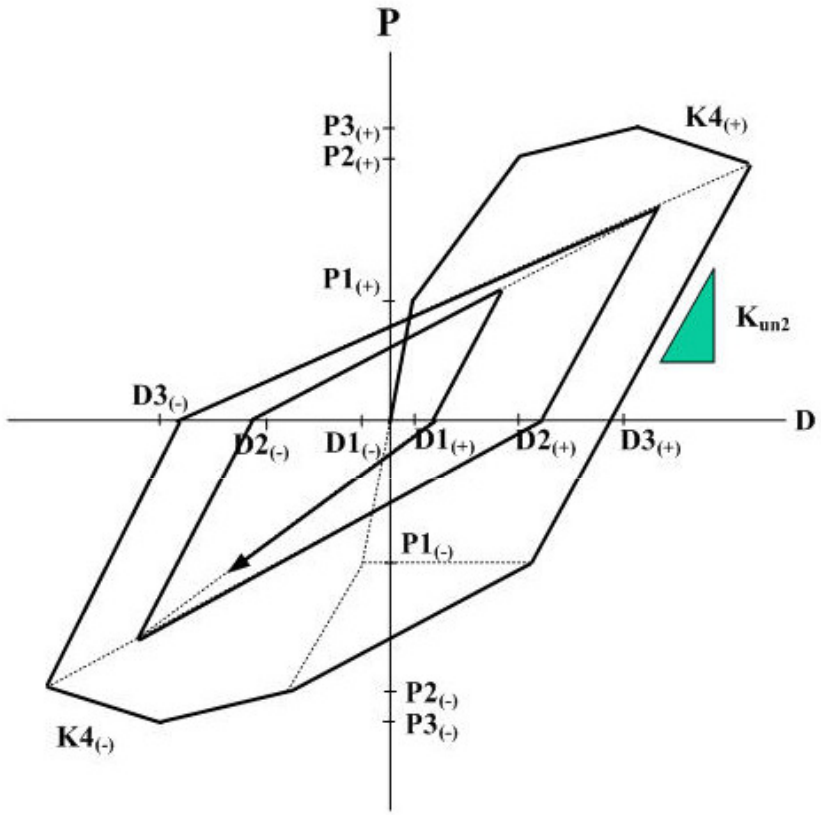
銲道破壞



柱破壞模式

遲滯模型 (RC柱-M PH)

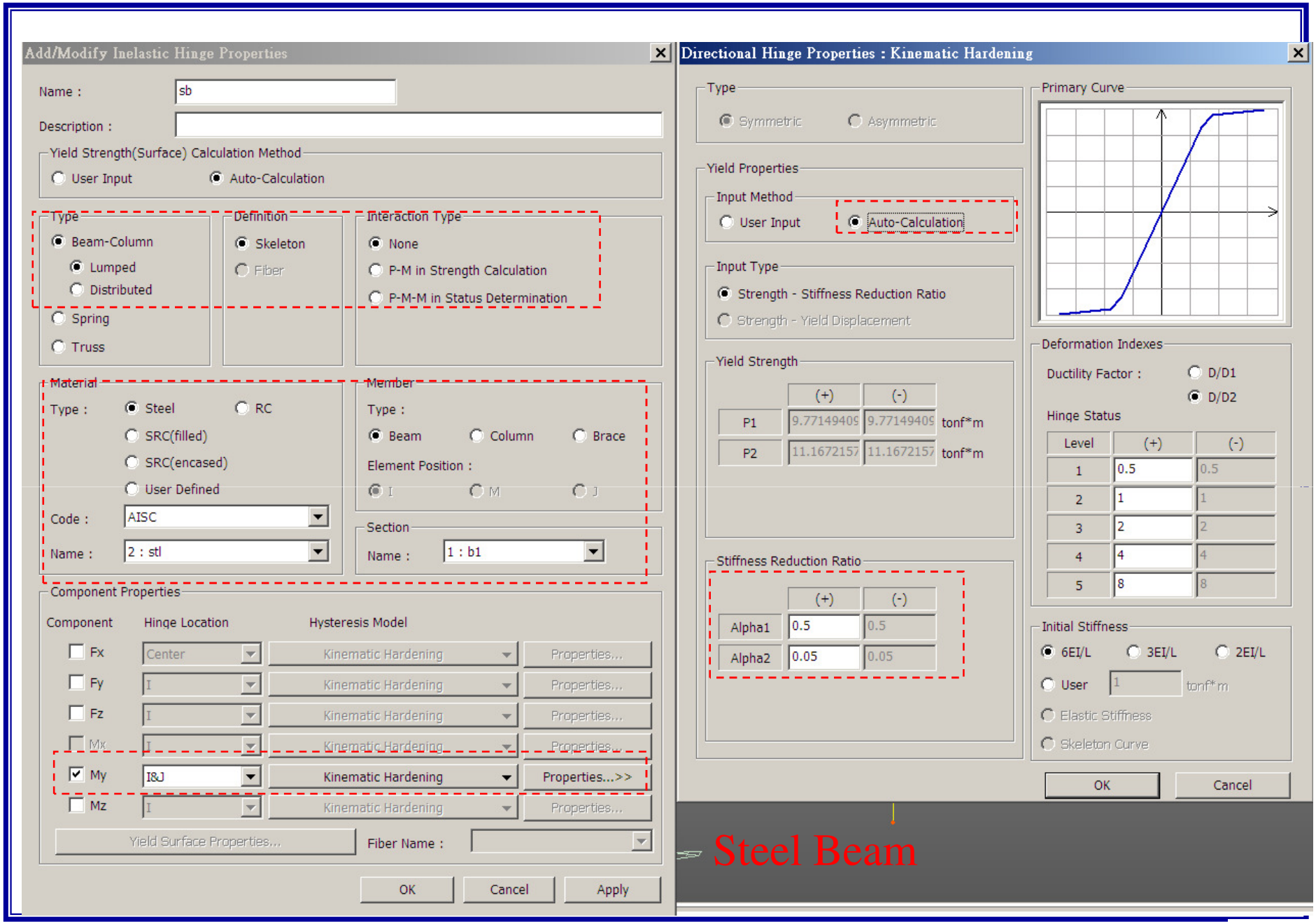
■ Takeda Tetra Linear type hysteresis model



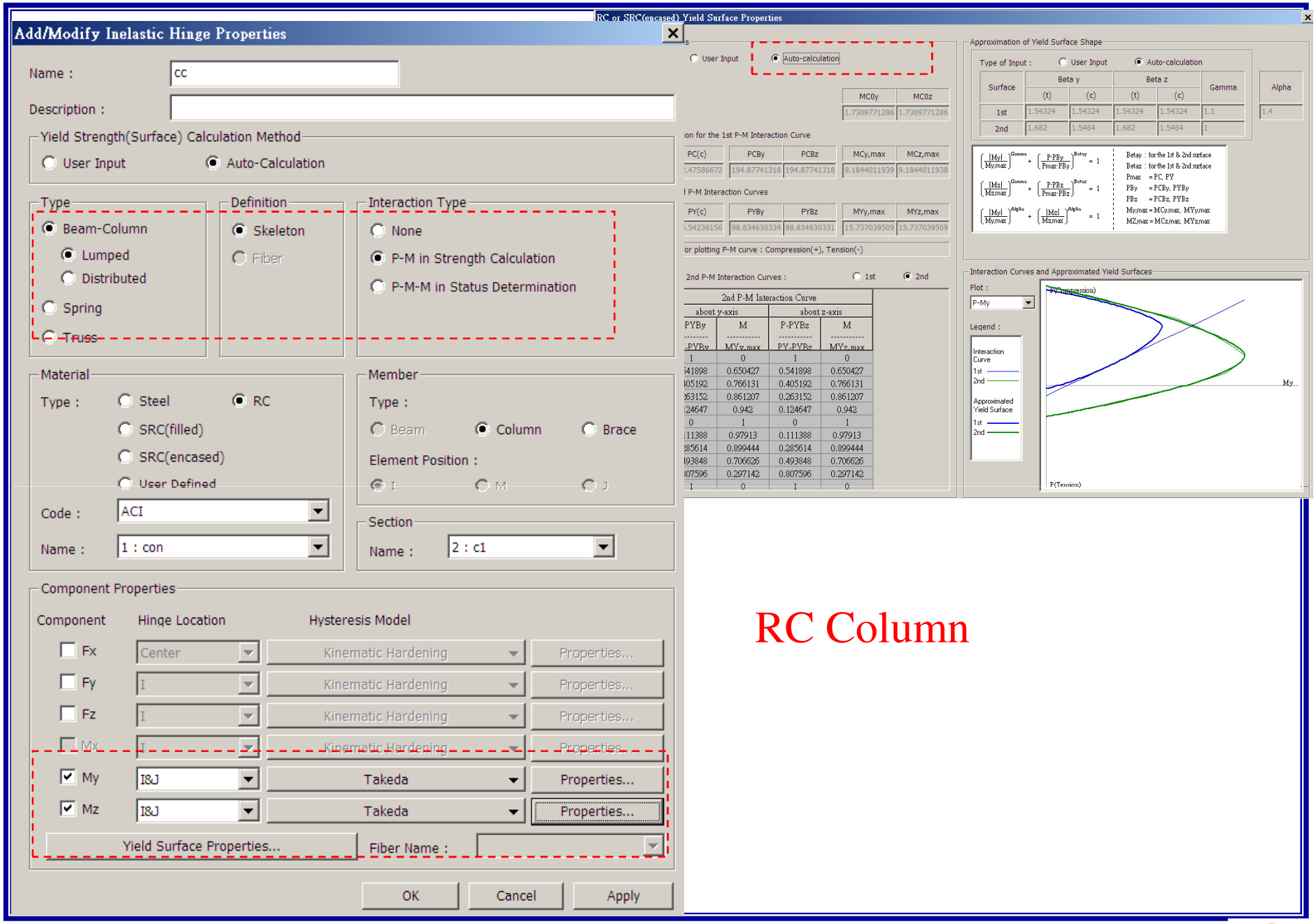
Takeda Tetra Linear hysteresis model

- Response points at the initial loading move along a tetralinear skeleton curve.
- If the current displacement or deformation, D, does not exceed D3, the hysteresis rules are identical to the Original Taketa hysteresis.
- If the current displacement or deformation, D, exceeds D3, response points move along the slope K4. For unloading, response points move by the same rules as the Original Taketa hysteresis.

NTUT
NCREE


Add/Modify Inelastic Hinge Properties
Name : sb
Description :
Yield Strength(Surface) Calculation Method
User Input
Auto-Calculation
Type
Beam-Column
Lumped
Distributed
Spring
Truss
Definition
Skeleton
Fiber
Interaction Type
None
P-M in Strength Calculation
P-M-M in Status Determination
Material
Type : Steel RC
SRC(filled)
SRC(encased)
User Defined
Code : AISC
Name : 2 : stl
Member
Type : Beam Column Brace
Element Position : I M J
Section
Name : 1 : b1
Component Properties
Component Hinge Location Hysteresis Model
Fx Center Kinematic Hardening Properties...
Fy I Kinematic Hardening Properties...
Fz I Kinematic Hardening Properties...
Mx I Kinematic Hardening Properties...
My I&J Kinematic Hardening Properties...>>
Mz I Kinematic Hardening Properties...
Yield Surface Properties...
Fiber Name :
OK
Cancel
Apply
Directional Hinge Properties : Kinematic Hardening
Type
Symmetric
Asymmetric
Yield Properties
Input Method
User Input
Auto-Calculation
Input Type
Strength - Stiffness Reduction Ratio
Strength - Yield Displacement
Yield Strength
(+) (-)
P1 9.77149409 9.77149409 tonf*m
P2 11.1672157 11.1672157 tonf*m
Stiffness Reduction Ratio
(+) (-)
Alpha1 0.5 0.5
Alpha2 0.05 0.05
Primary Curve
Deformation Indexes
Ductility Factor : D/D1 D/D2
Hinge Status
Level (+) (-)
1 0.5 0.5
2 1 1
3 2 2
4 4 4
5 8 8
Initial Stiffness
6EI/L 3EI/L 2EI/L
User 1 tonf*m
Elastic Stiffness
Skeleton Curve
OK
Cancel
Steel Beam

NTUT
NCREE


Add/Modify Inelastic Hinge Properties
Name :
cc
Description :
Yield Strength(Surface) Calculation Method
User Input
Auto-Calculation
Type
Beam-Column
Lumped
Distributed
Spring
Truss
Definition
Skeleton
Fiber
Interaction Type
None
P-M in Strength Calculation
P-M-M in Status Determination
Material
Type :
Steel
RC
SRC(filled)
SRC(encased)
User Defined
Code :
ACI
Name :
1 : con
Member
Type :
Beam
Column
Brace
Element Position :
Section
Name :
2 : c1
Component Properties
Component
Hinge Location
Hysteresis Model
Fx
Fy
Fz
Mx
My
Mz
Center
I
I&J
Kinematic Hardening
Takeda
Properties...
Yield Surface Properties...
Fiber Name :
OK
Cancel
Apply
RC or SRC(encased) Yield Surface Properties
User Input
Auto-calculation
MC0y
MC0z
1.7309771286
1.7309771286
on for the 1st P-M Interaction Curve
PC(c)
PCBy
PCBz
MCy,max
MCz,max
194.87741318
194.87741318
9.1844011939
9.1844011938
I P-M Interaction Curves
PY(c)
PYBy
PYBz
MYy,max
MYz,max
98.834630334
98.834630331
15.737039509
15.737039509
or plotting P-M curve : Compression(+), Tension(-)
2nd P-M Interaction Curves :
1st
2nd
2nd P-M Interaction Curve
about y-axis
about z-axis
PYBy
M
P-PYBz
M
MYy,max
MYz,max
Approximation of Yield Surface Shape
Type of Input :
User Input
Auto-calculation
Surface
Beta y
Beta z
Gamma
Alpha
(t)
(c)
1st
2nd
1.54324
1.682
1.5464
1.1
1.4
Betay : for the 1st & 2nd surface
Betaz : for the 1st & 2nd surface
Pmax = PC, PY
PBy = PCBy, PYBy
PBz = PCBz, PYBz
My,max = MCy,max, MYy,max
MZ,max = MCz,max, MYz,max
Interaction Curves and Approximated Yield Surfaces
Plot :
P-My
Legend :
Interaction Curve
1st
2nd
Approximated Yield Surface
1st
2nd
P(Compression)
My
P(Tension)

RC Column

Directional Hinge Properties : Takeda

Type
Symmetric Asymmetric

Yield Properties
Input Method
User Input Auto-Calculation

Input Type
Strength - Stiffness Reduction Ratio
Strength - Yield Displacement

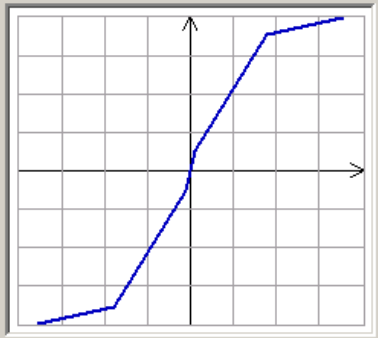
Yield Strength

	(+)	(-)	
P1	16975.0868	16975.0868	kN*mm
P2	109614.398	109614.398	kN*mm

Stiffness Reduction Ratio

	(+)	(-)
Alpha1	0.35	0.35
Alpha2	0.05	0.05

Primary Curve



Deformation Indexes
Ductility Factor : D/D1 D/D2

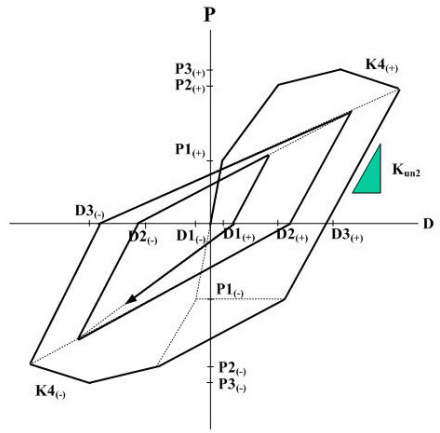
Hinge Status

Level	(+)	(-)
1	0.5	0.5
2	1	1
3	2	2
4	4	4
5	8	8

Initial Stiffness
6EI/L 3EI/L 2EI/L
User 9806.65 kN*mm
Elastic Stiffness
Skeleton Curve

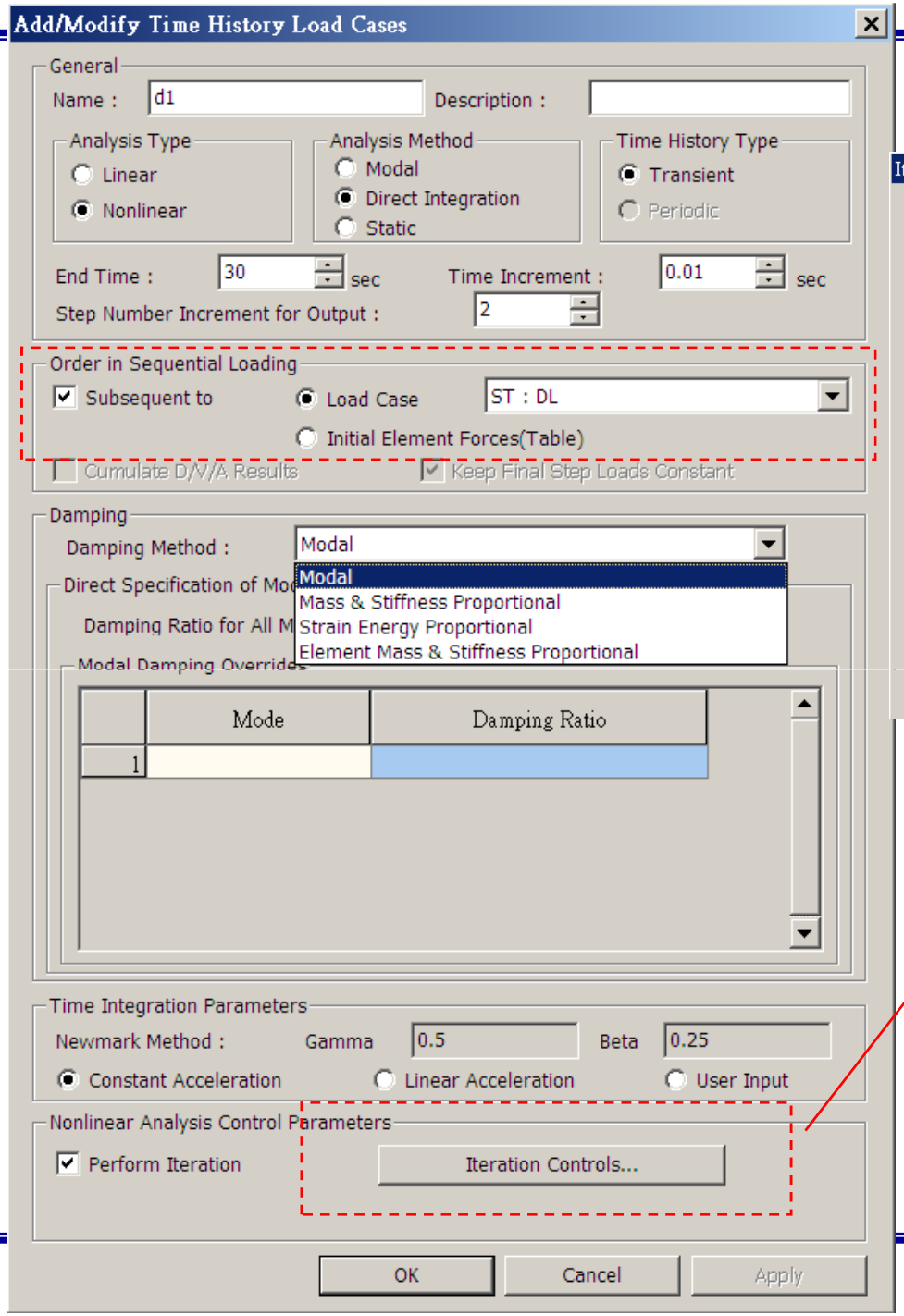
Unloading Stiffness Parameter
Exponent in Unloading Stiffness Calculation : 0.4
Inner Loop Unloading Stiffness Reduction Factor : 1

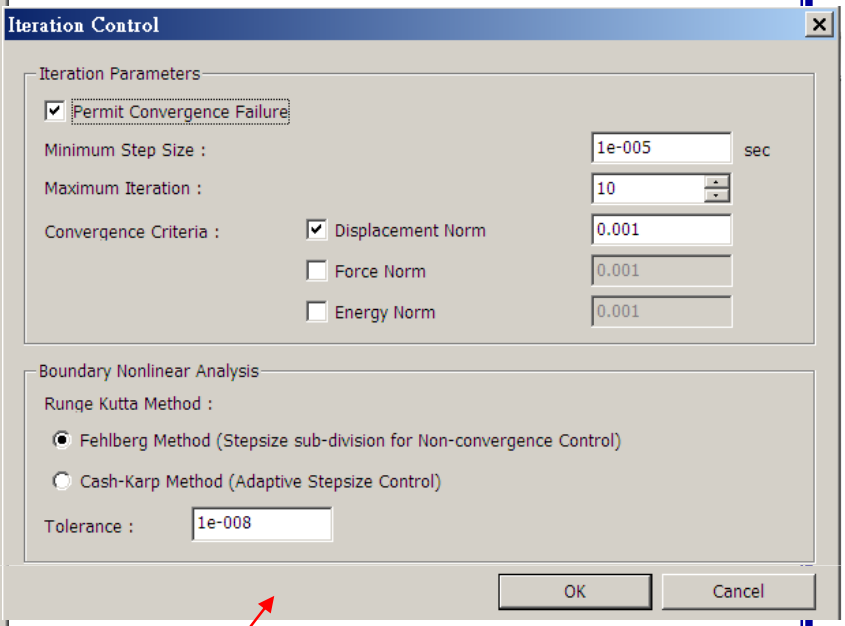
OK Cancel



對剪力破壞控制則調小勁度折減係數

NTUT
NCREE

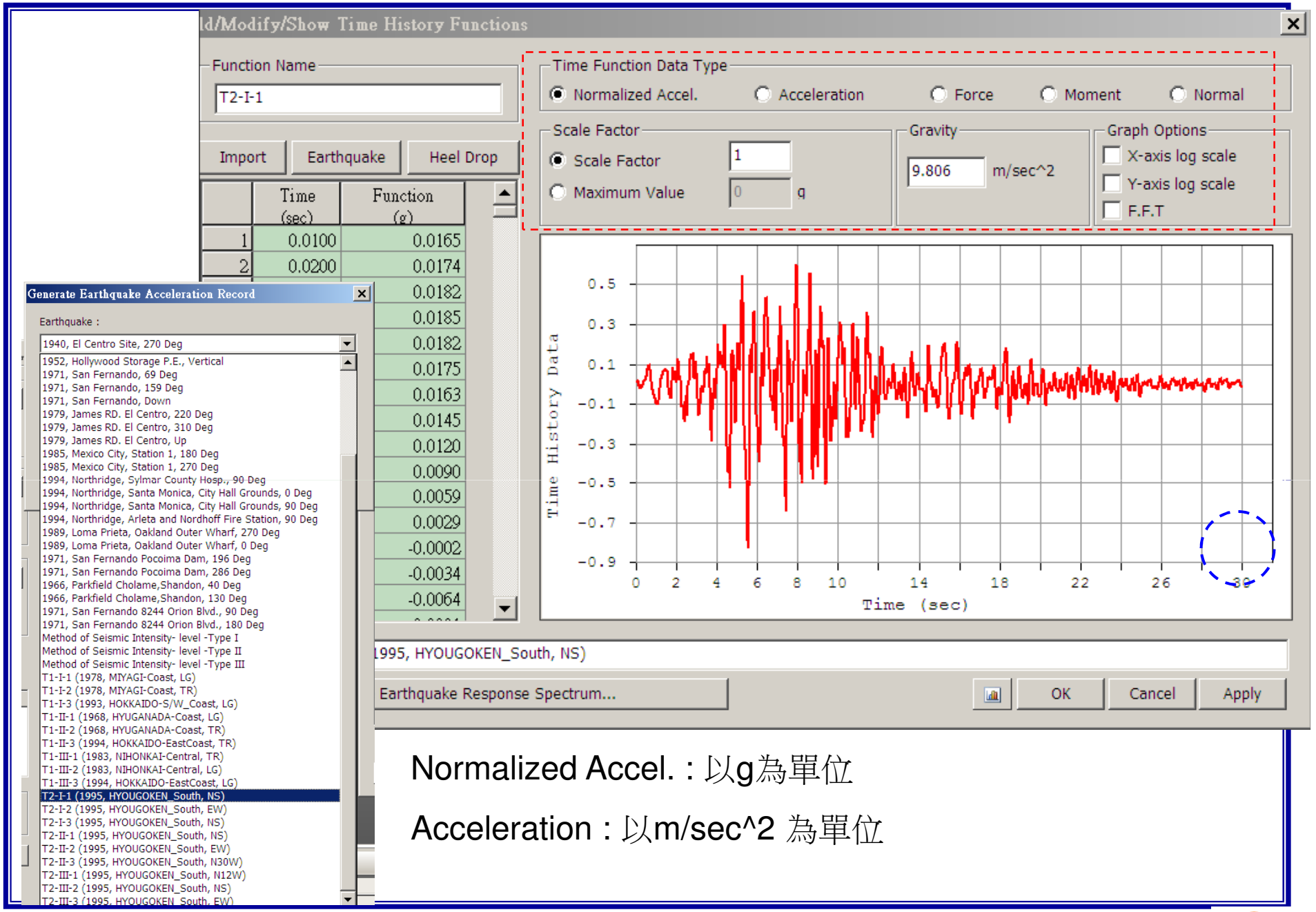




預加D.L.

Direct integration 比Model 準確

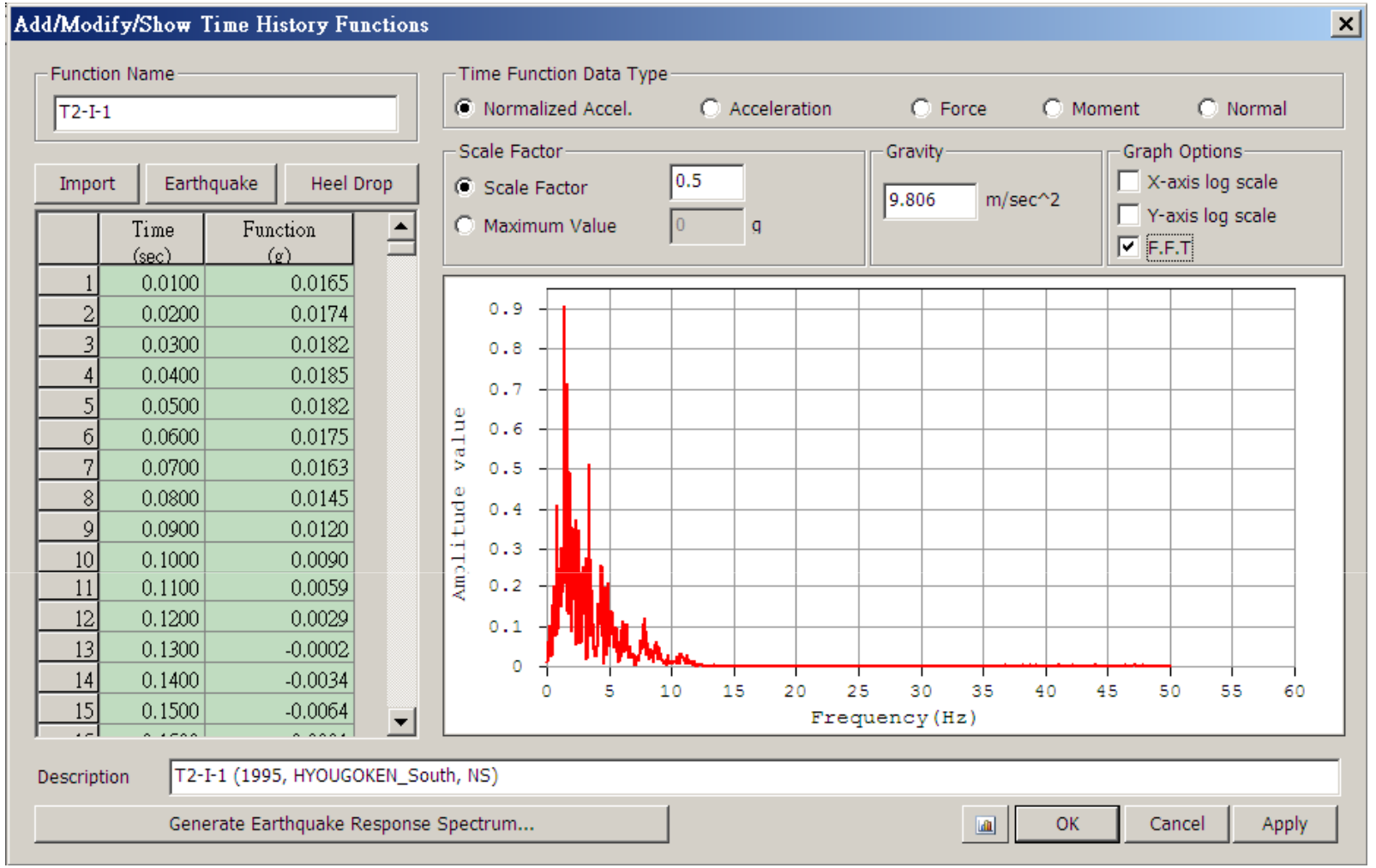
NTUT
NCREE



Normalized Accel. : 以g為單位

Acceleration : 以m/sec^2 為單位

NTUT
NCREE



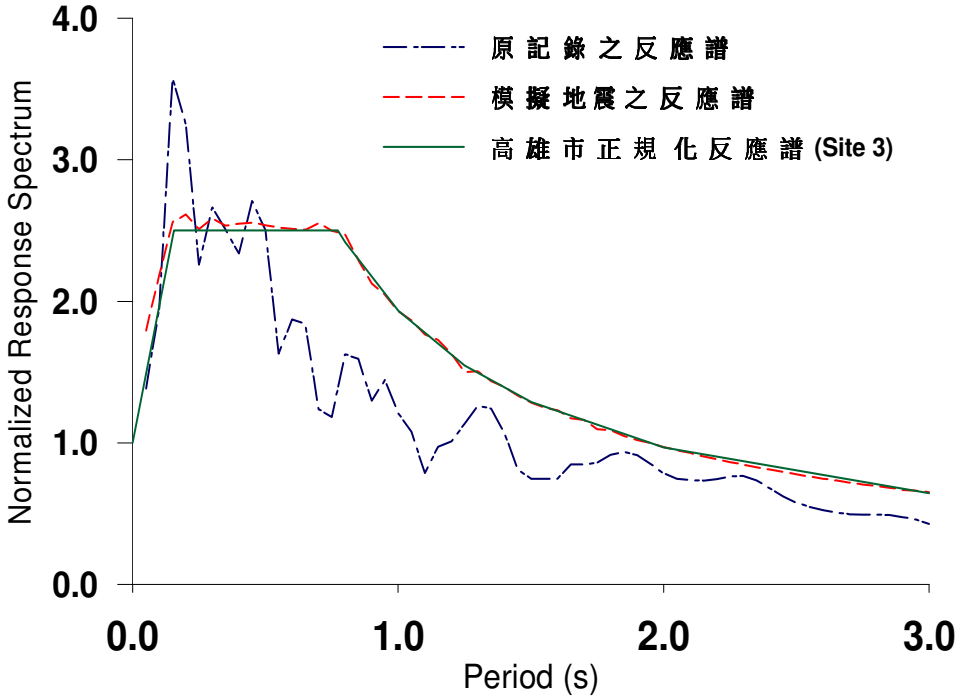
Scale factor =0.5 ; input PGA=0.5*0.8g = 0.4g

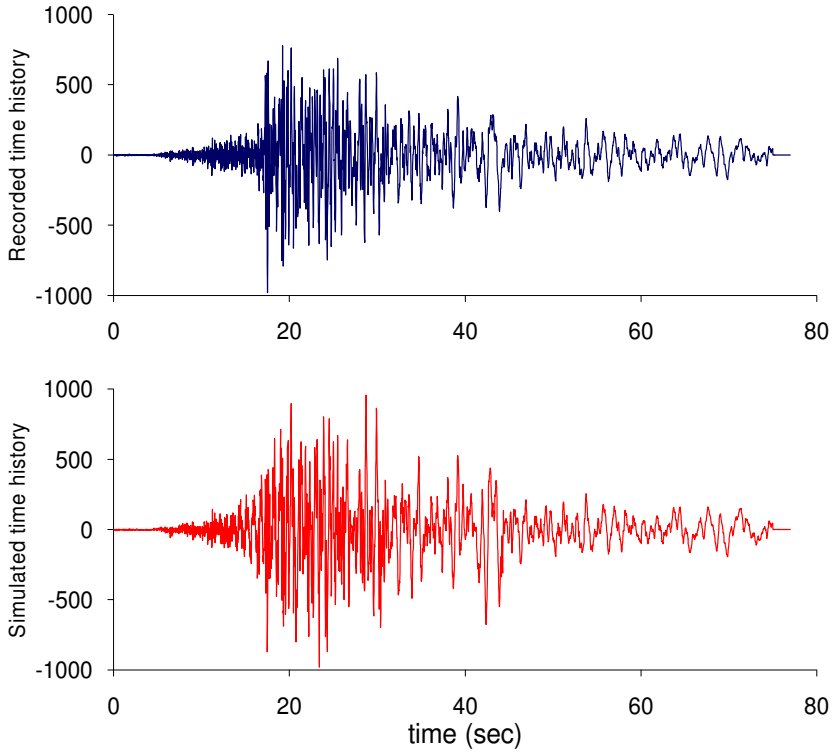
Sa/2.5為EPA; PGA/(1.1~1.2)才約為EPA; 故EPA=0.4/1.2=0.33g

3.6.1 輸入地震要求

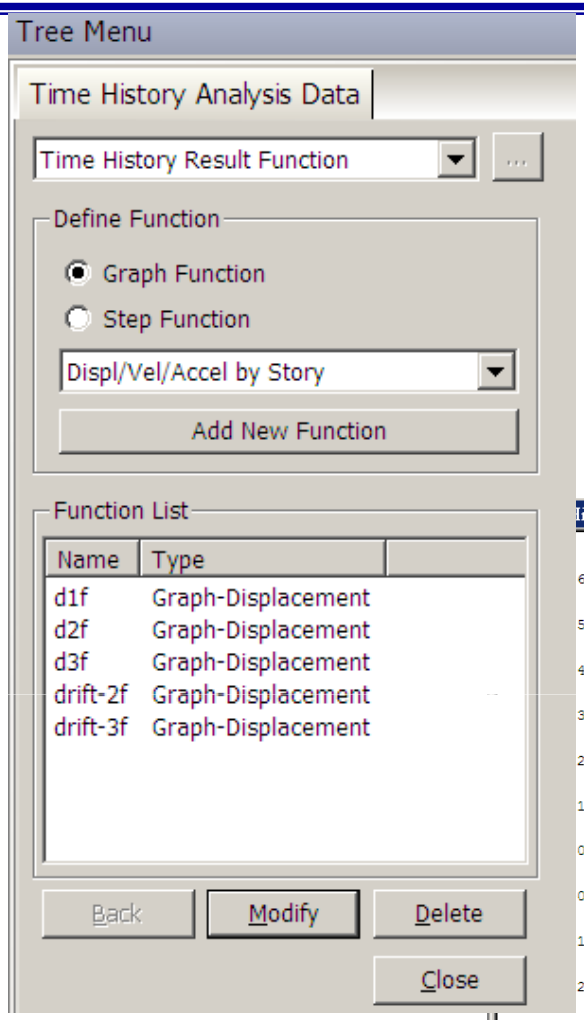
至少三個與設計反應譜相符之水平地震紀錄，其應能確切反映工址設計地震(或最大考量地震)之地震規模、斷層距離與震源效應。

針對任一個水平地震紀錄，計算其5%阻尼之反應譜。同時，調整地震紀錄使得位於0.2T至1.5T週期範圍內任一點之譜加速度值不得低於設計譜加速度值之90%及於此週期範圍內之平均值不得低於設計譜加速度值之平均值，其中T為建物基本模態之振動週期。



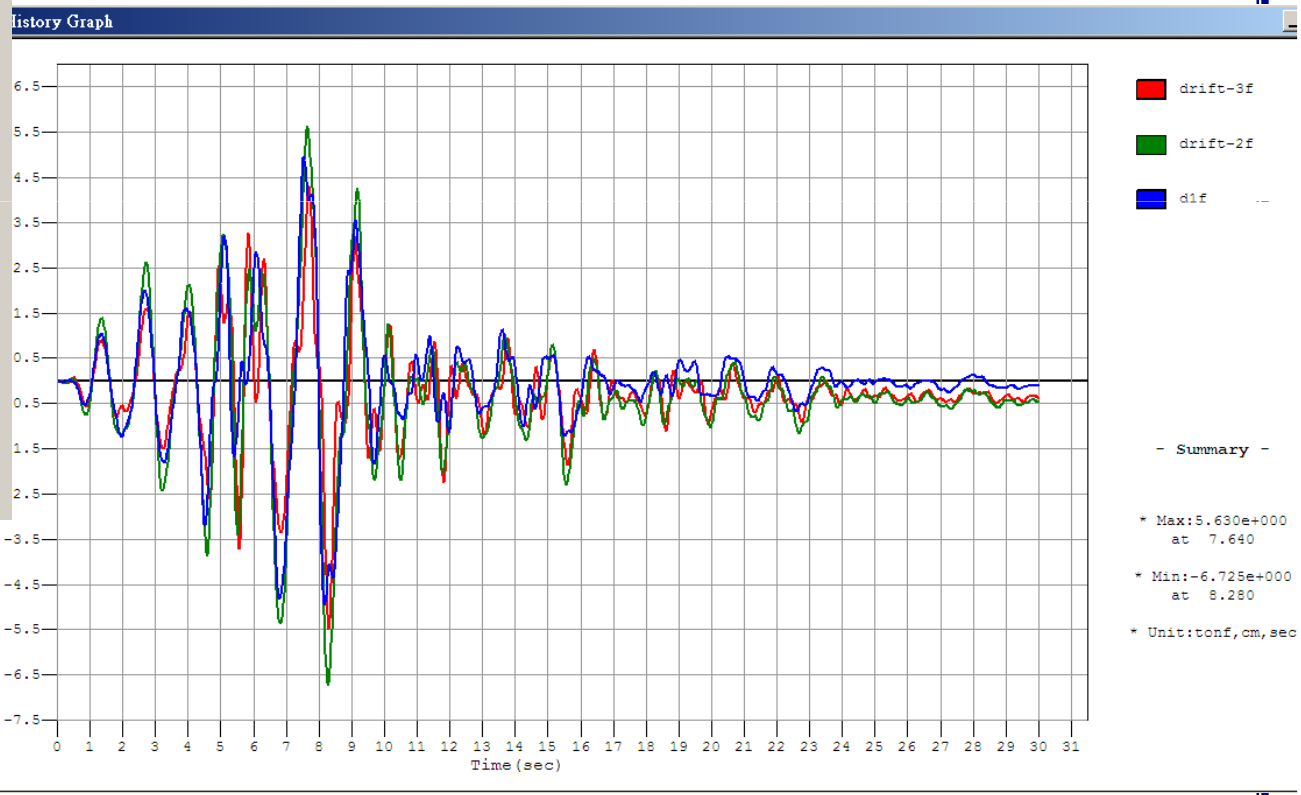


採用95年12屏東地震**主震**，測站KAU(高雄氣象站)之EW向(東西向)記錄為原始地震記錄，調整成與高雄市規範site-3反應譜相符之地震記錄



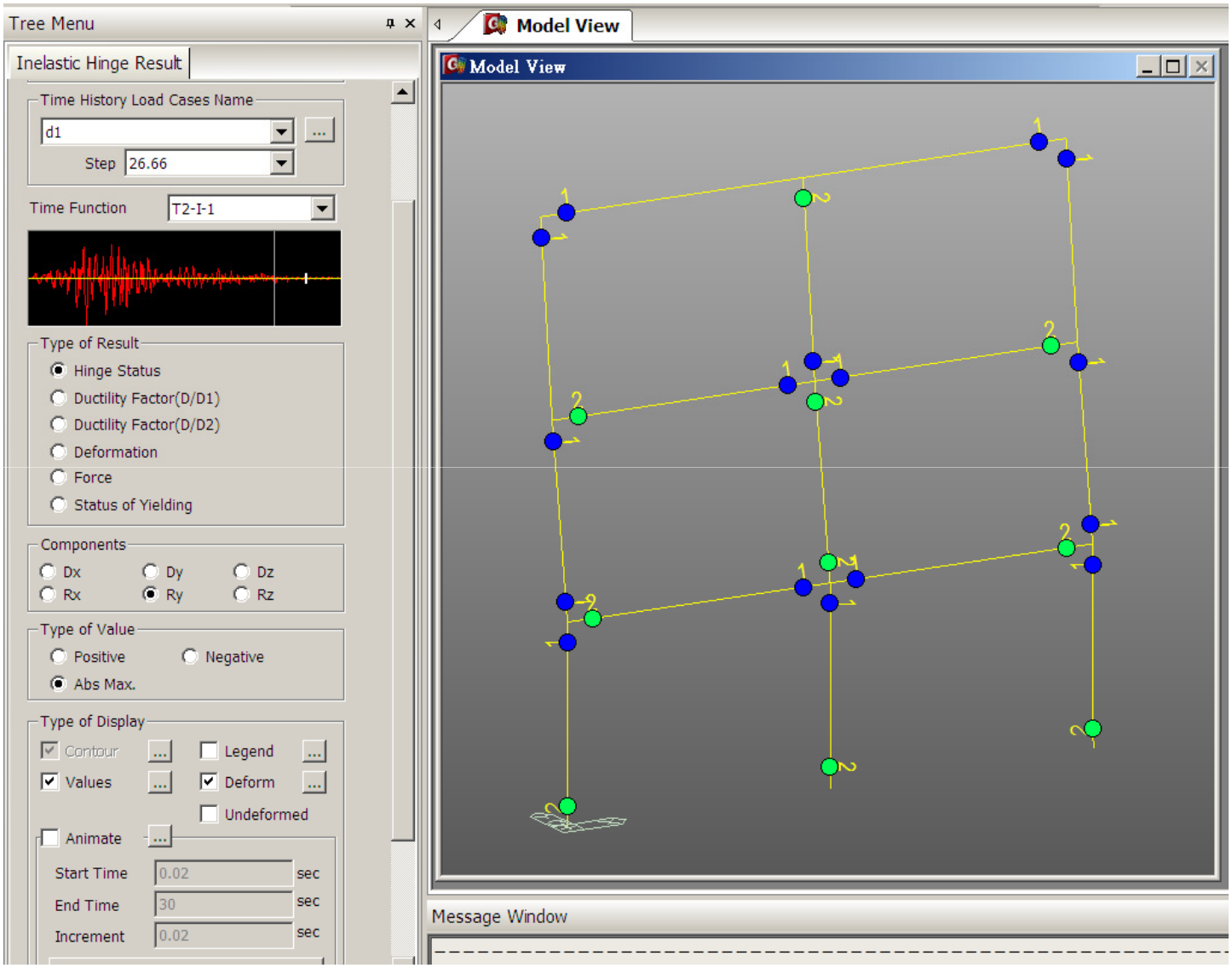
層間變位角檢核:

最大變位角=6.5/350 = 1.8% (OK)



NTUT
NCREE

歷時分析塑鉸狀態

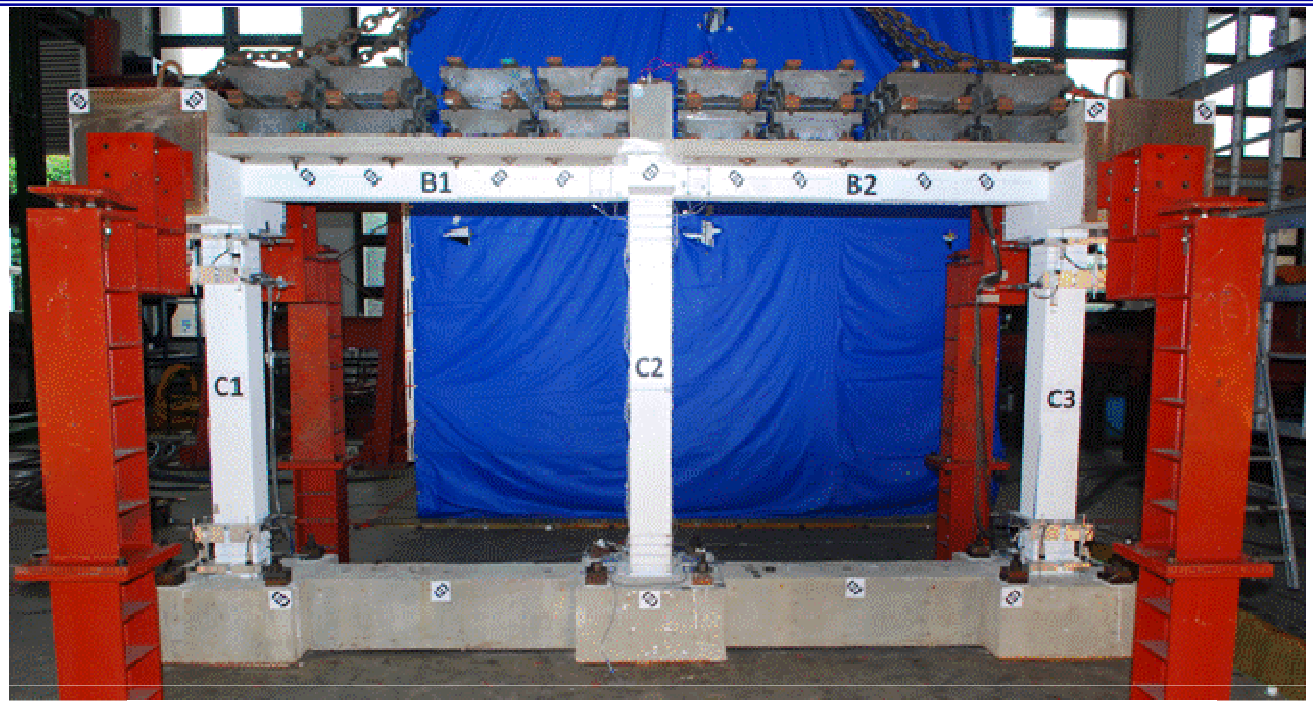


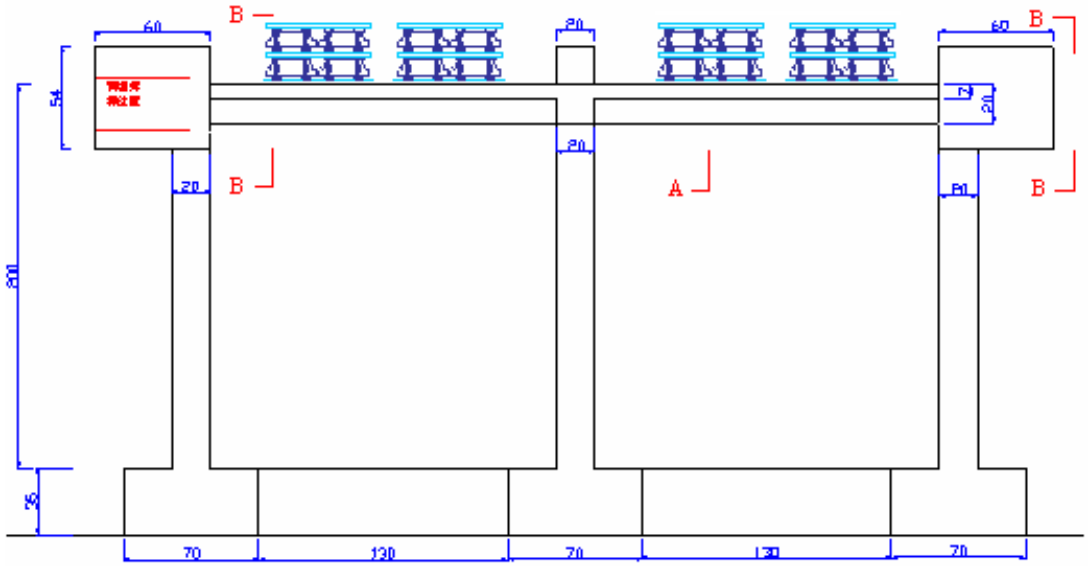
NTUT
NCREE

混凝土構架之振動台試驗與模擬分析

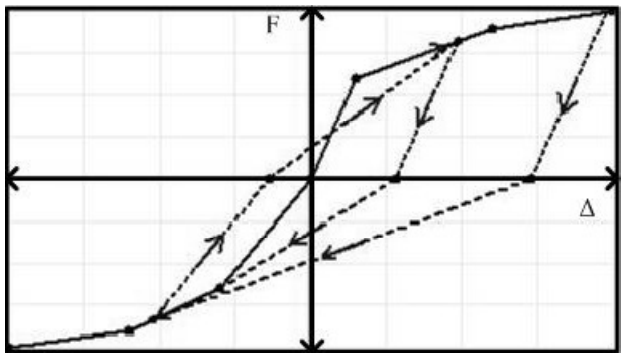
NTUT
NCREE

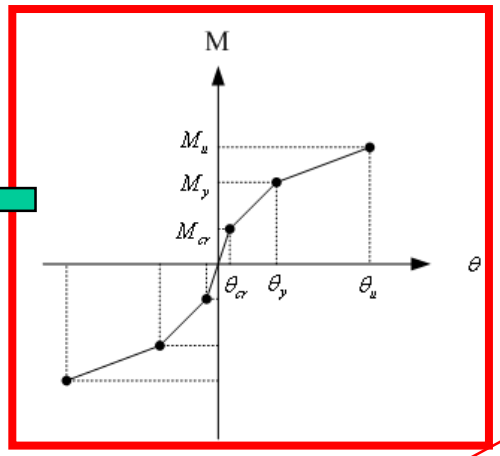


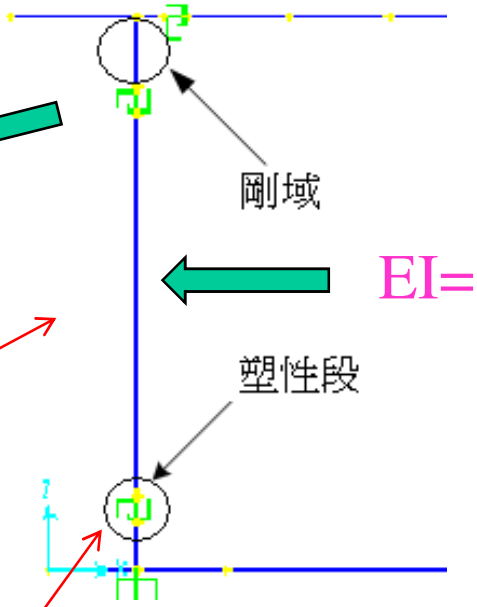


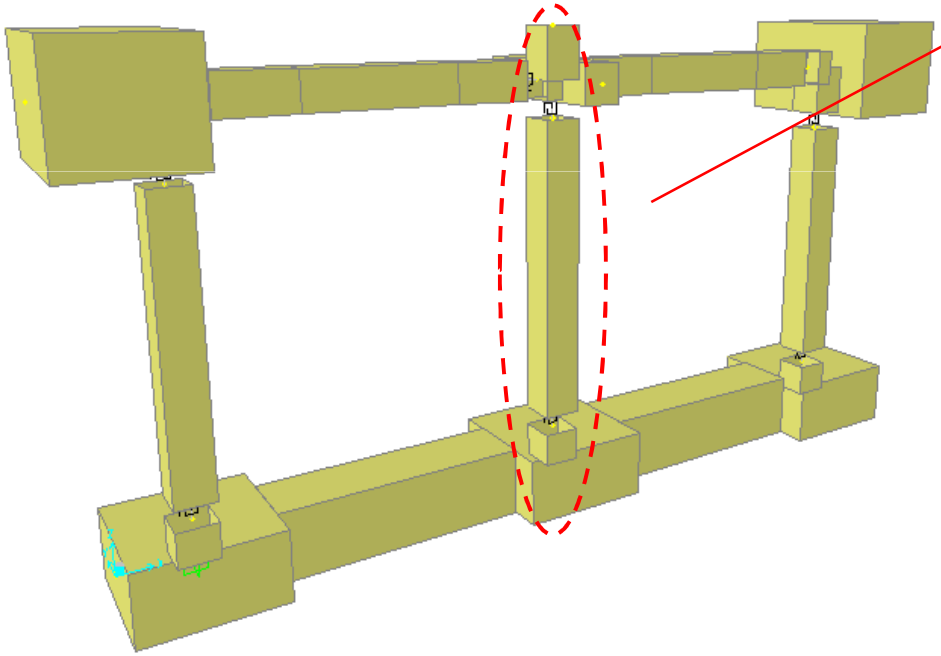


NTUT
NCREE









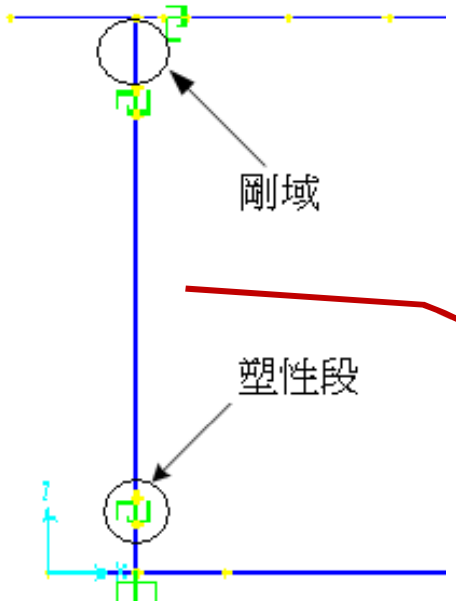
模擬之單層雙跨RC構架立體圖

$$L_p = 0.5d + 0.05z$$

d = 斷面有效深度

z = 臨界斷面至反曲點之距離

調整構材勁度

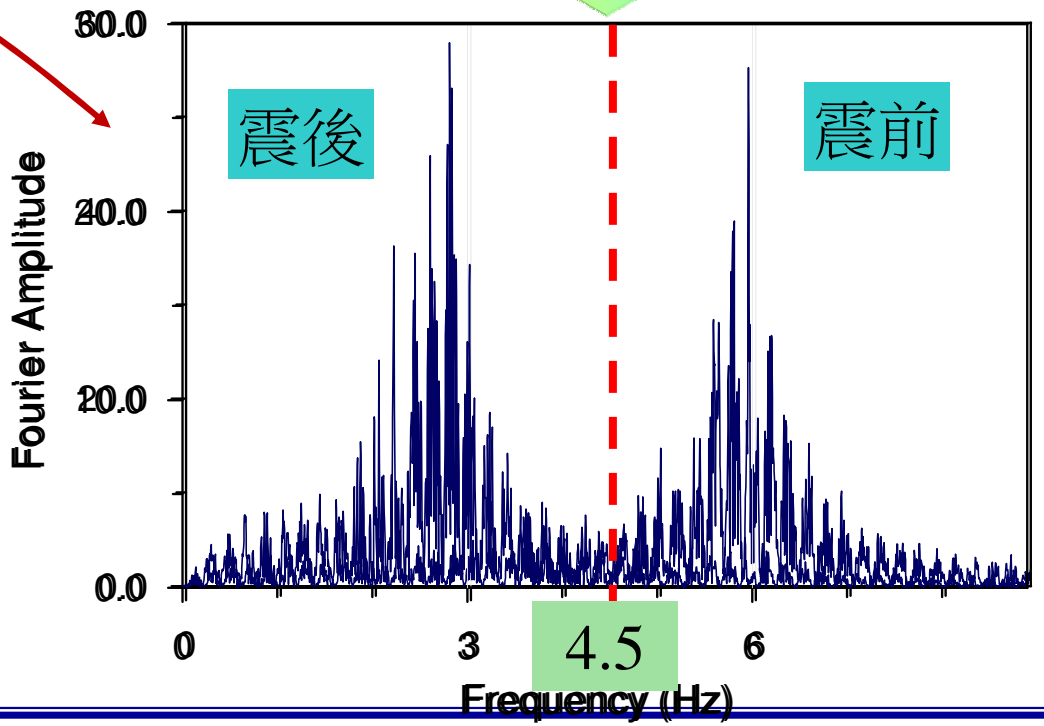


分析之採用勁度

$$EI_e = (EI_g + EI_{cr})/2$$

模態分析

EI值調整設定



Identification

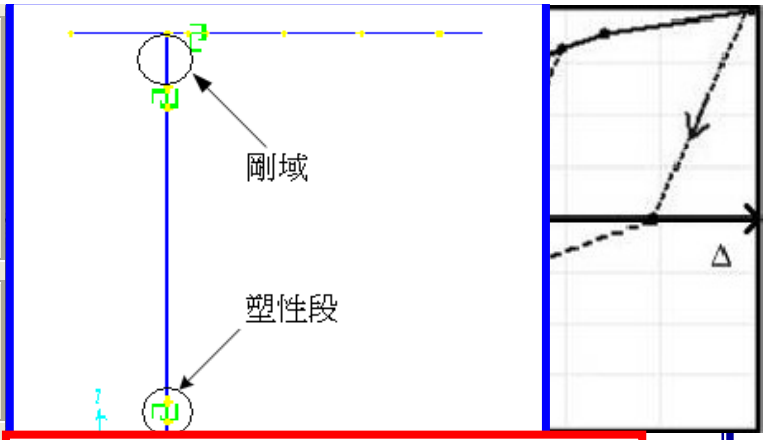
Property Name	LINK
Direction	R3
Type	MultiLinear Plastic
NonLinear	Yes

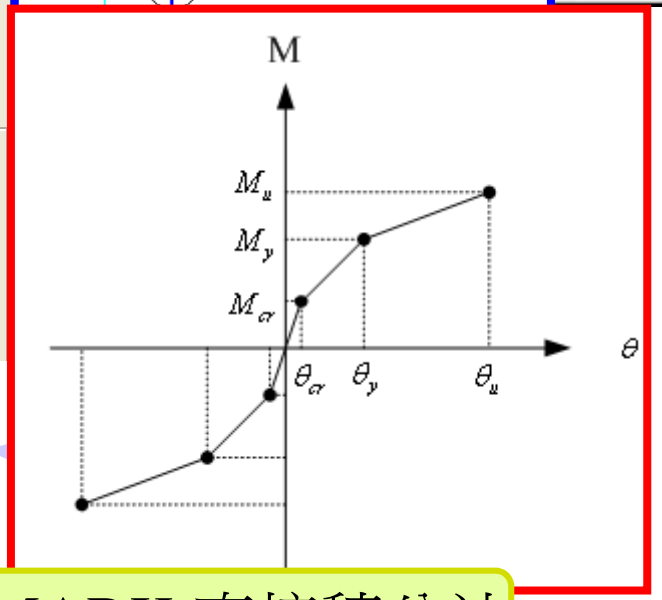
Properties Used For Linear Analysis Cases

Effective Stiffness	0.
Effective Damping	0.

Multi-Linear Force-Deformation Definition

	Rotation	Moment
1	-10.	-1.
2	-1.	-1.
3	0.	0.
4	1.	1.
5	10.	1.





彎矩與轉角

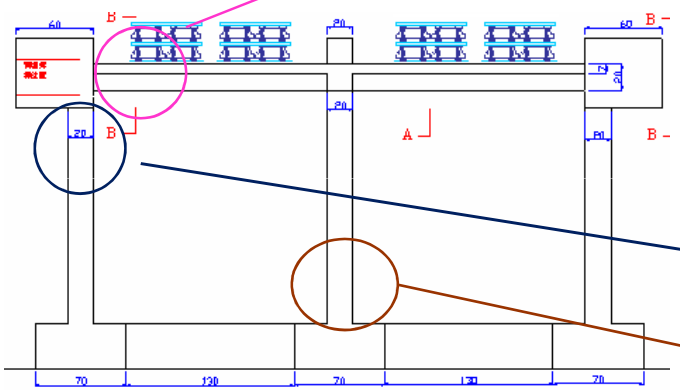
旋轉勁度

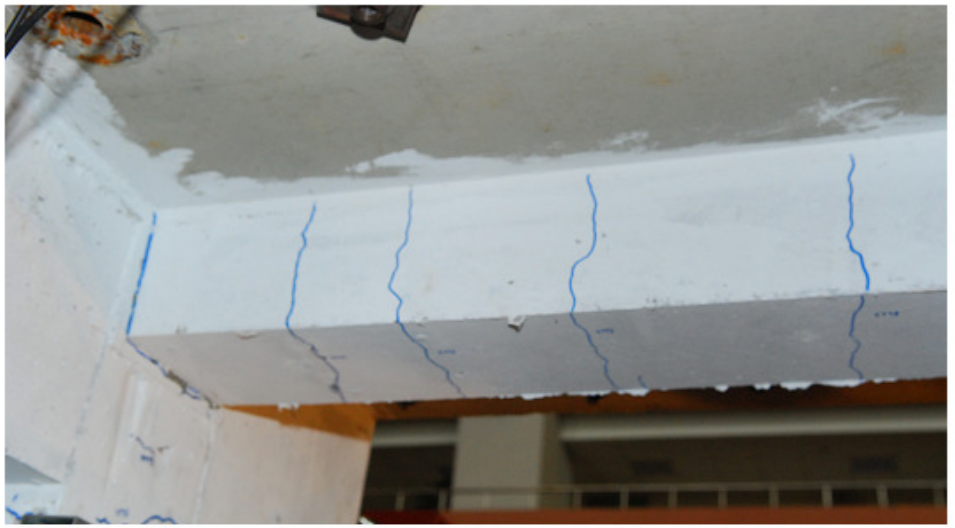
NEWMARK 直接積分法

非線性動力直接積分歷時分析

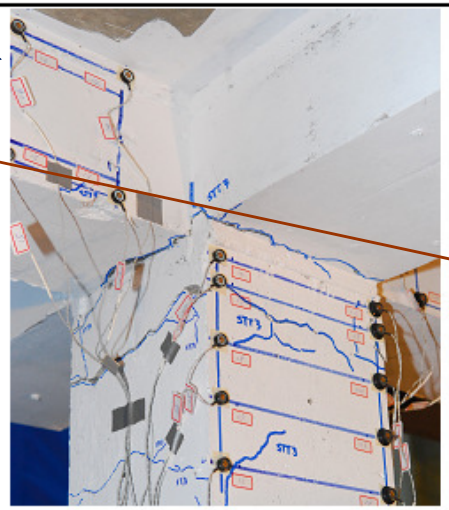
NTUT
NCREE

RCF3(TCU082, PGA=1.3g)試驗後之破壞情況





構架 梁端部



構架之柱上端



構架之柱下端

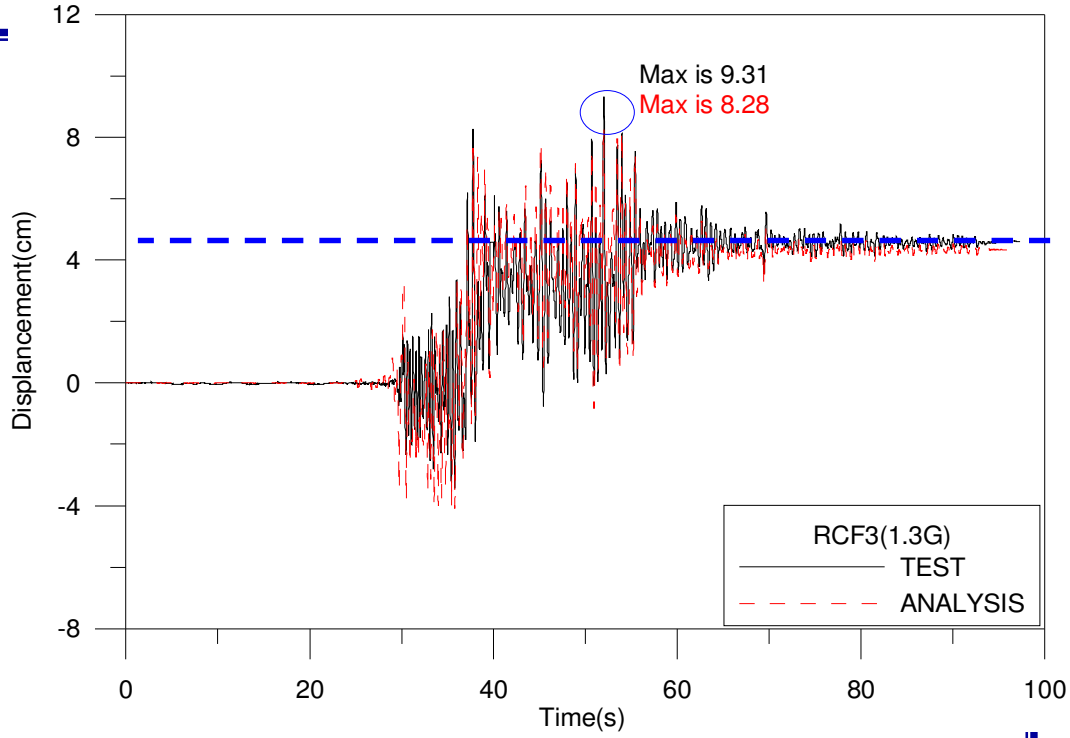
RCF3
相對樓層位移動態反應比對

TCU082(1.3g)
RCF3

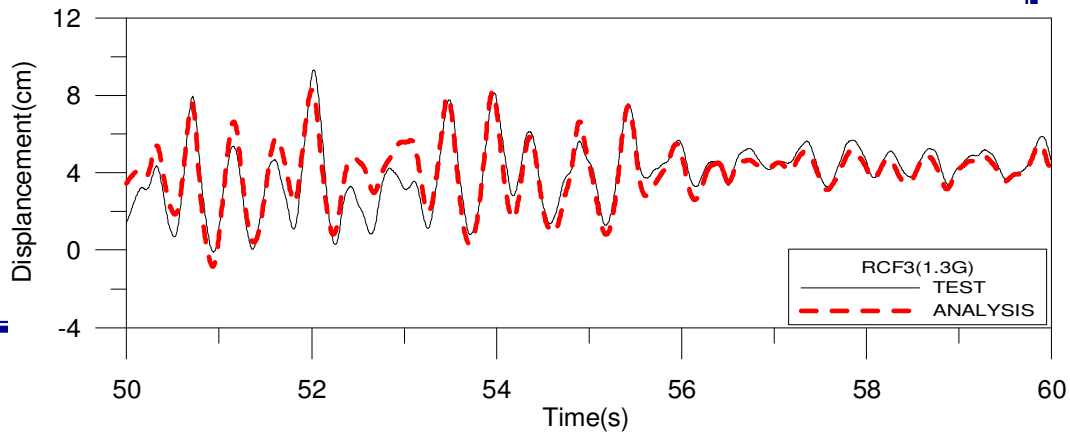
實驗:於52秒左右有最大值9.3公分、永久位移4.4公分。

分析:於52秒左右有最大值8.2公分、永久位移4.2公分。

重疊比對其分析之最大樓層位移減少1.0公分、永久位移降低0.2公分，且頻率近似相同。

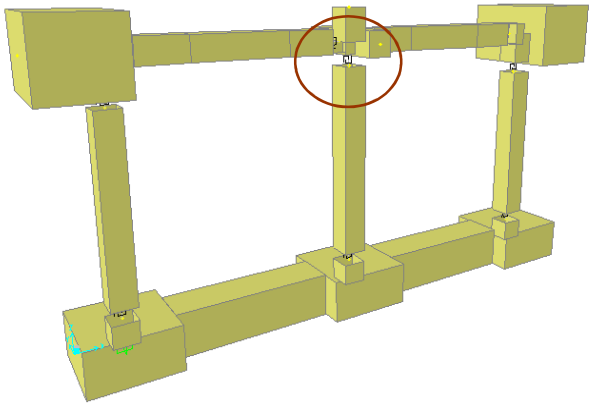


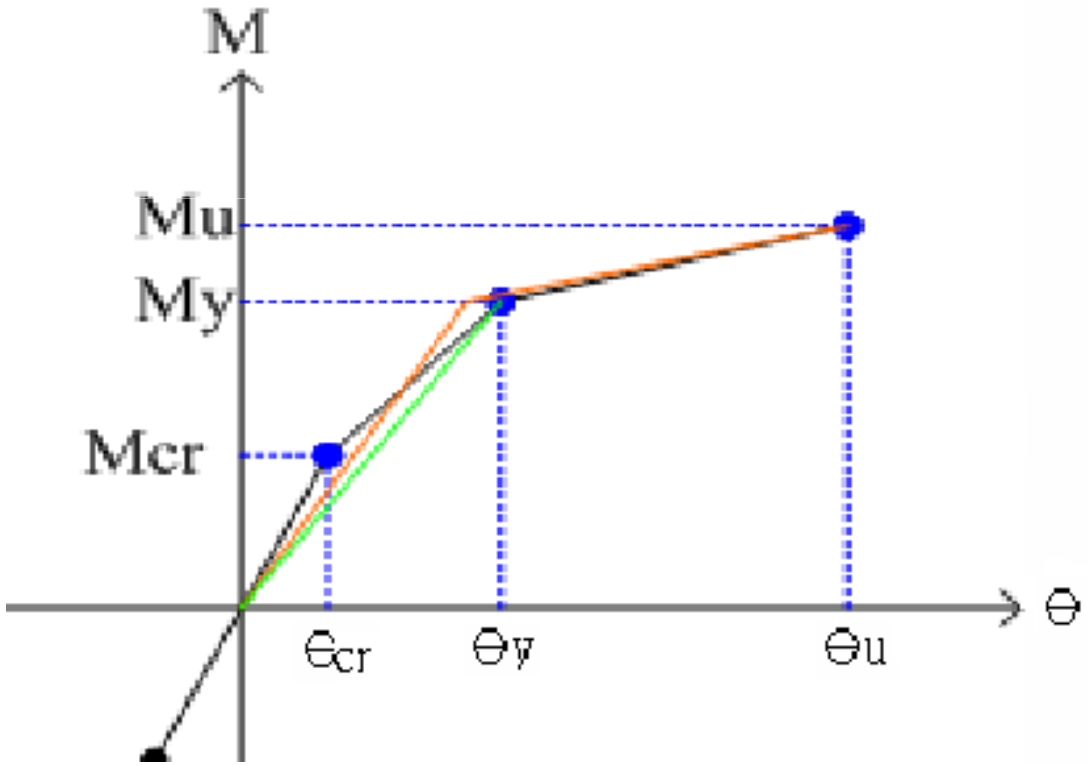
取其中30~60秒放大觀察

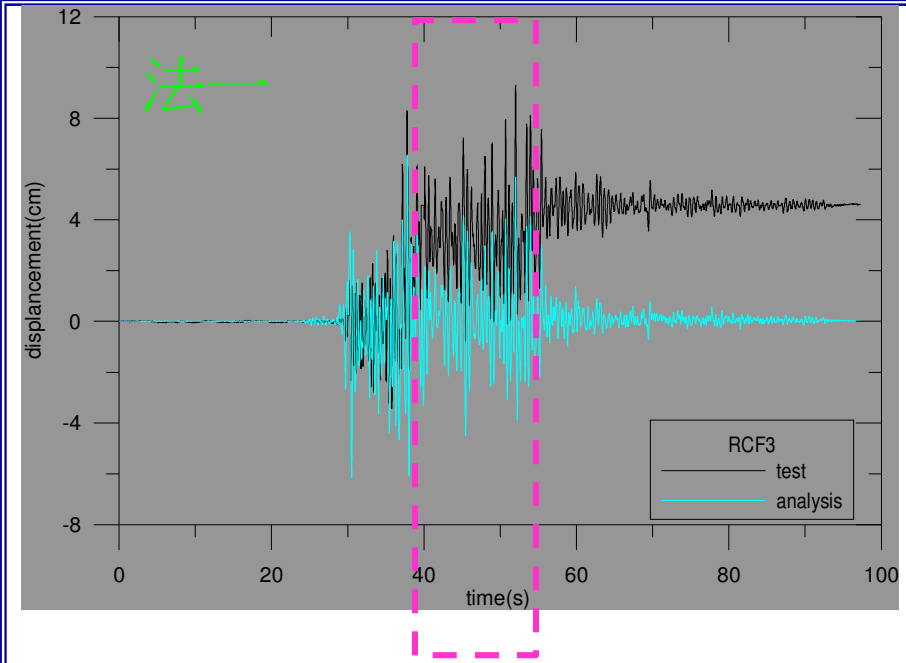


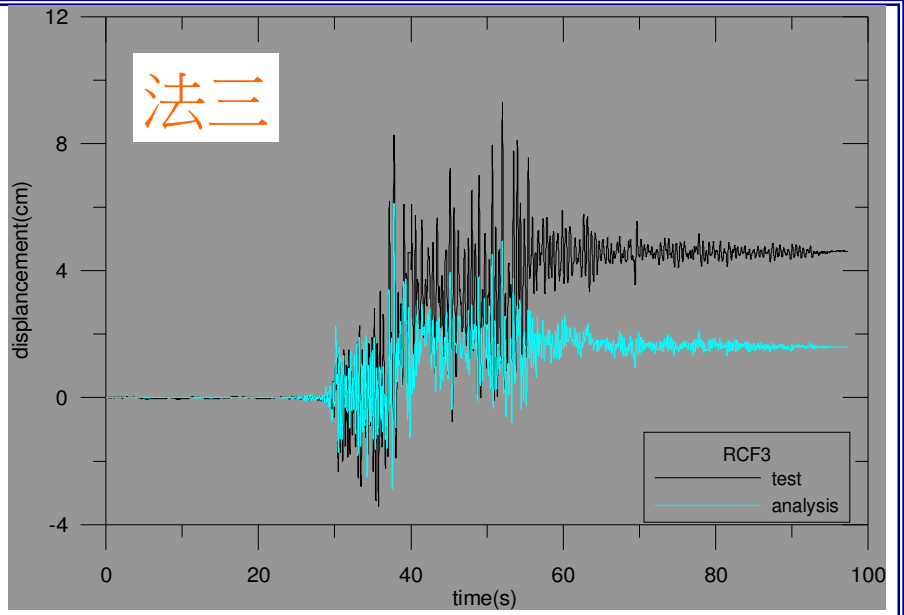
討論 M-θ 關係

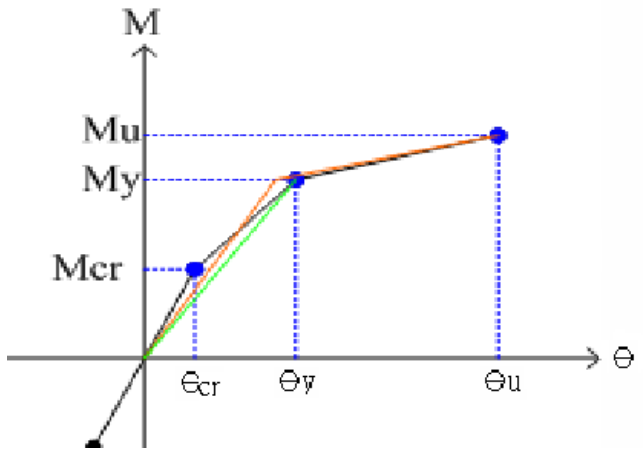
- 方法一:採用 My 、Mu兩段斜率進行分析
- 方法二:採用Mcr 、 My 、 Mu三段斜率進行分析
- 方法三:採用法一Mcr與My間之切線斜率等面積進行分析

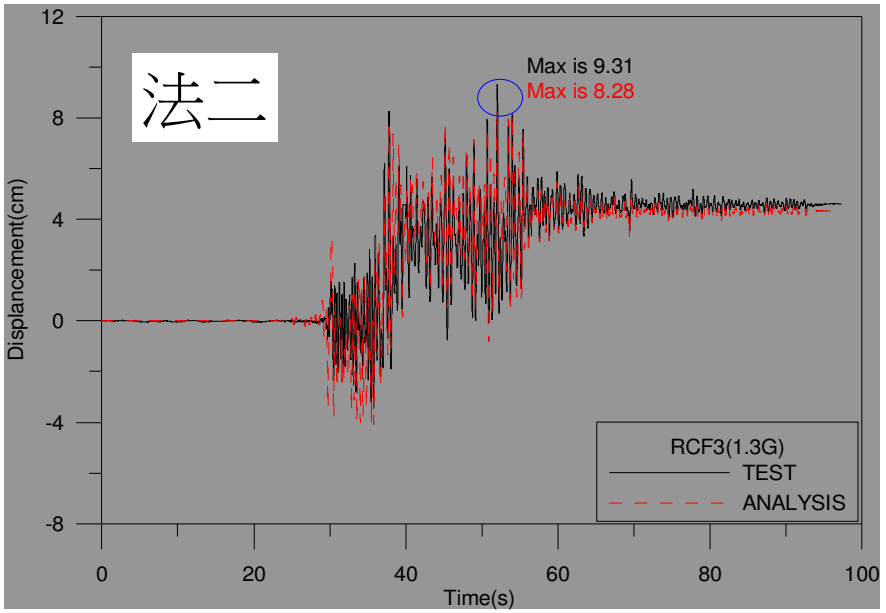




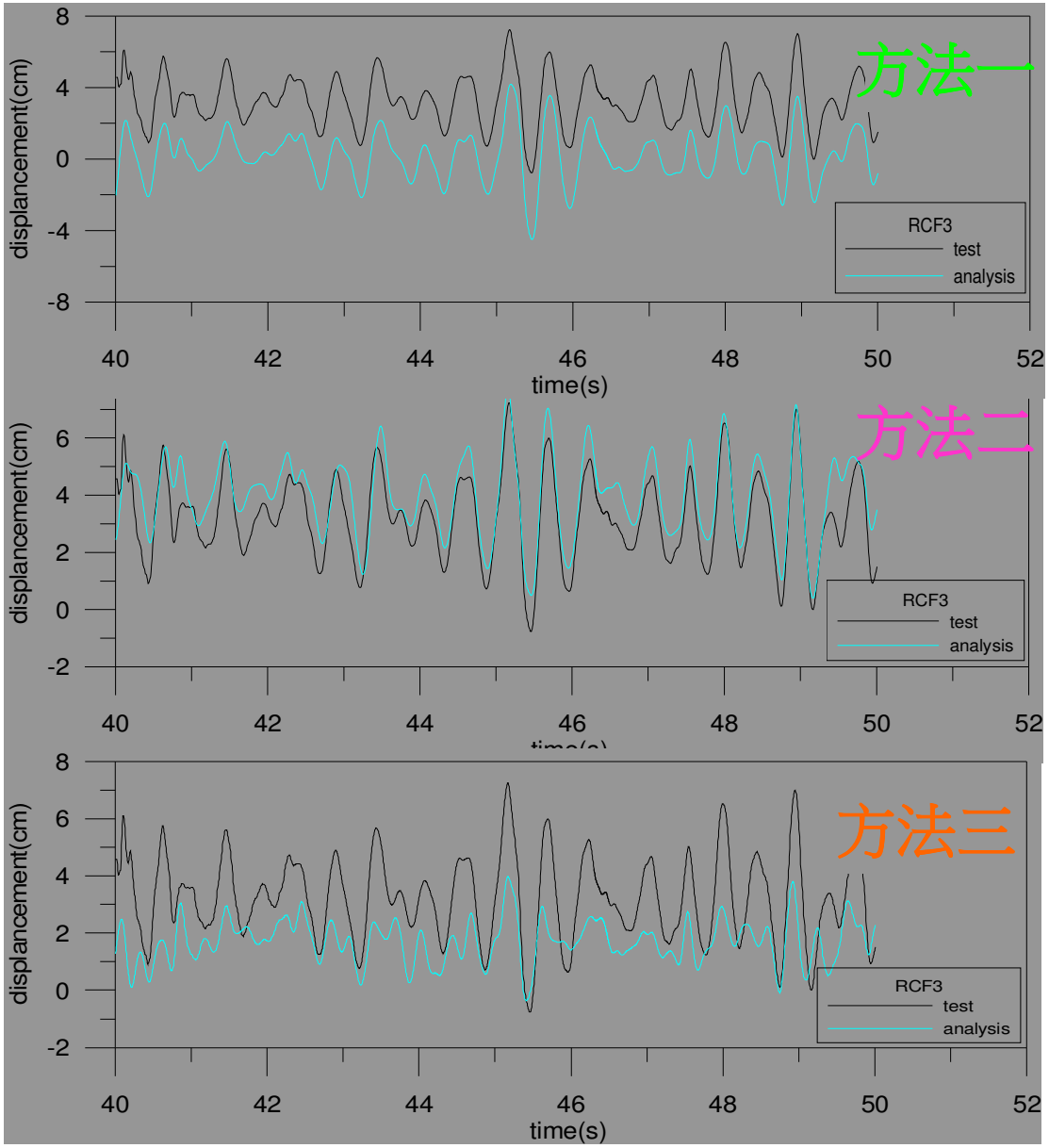

法一
displacement(cm)
time(s)
RCF3
test
analysis


法三
displacement(cm)
time(s)
RCF3
test
analysis


M
Mu
My
Mcr
θcr
θy
θu
θ


法二
Max is 9.31
Max is 8.28
Displacement(cm)
Time(s)
RCF3(1.3G)
TEST
ANALYSIS

NTUT
NCREE



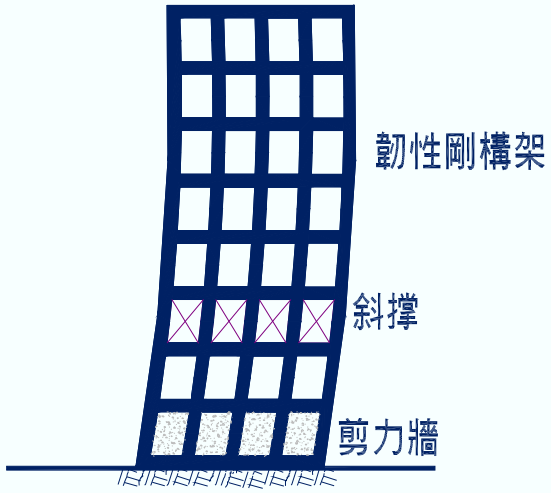
開裂行為之模擬
(Mcr)影響分析甚大

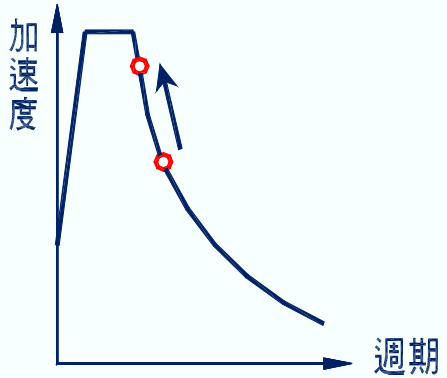
使用阻尼器之減震結構設計



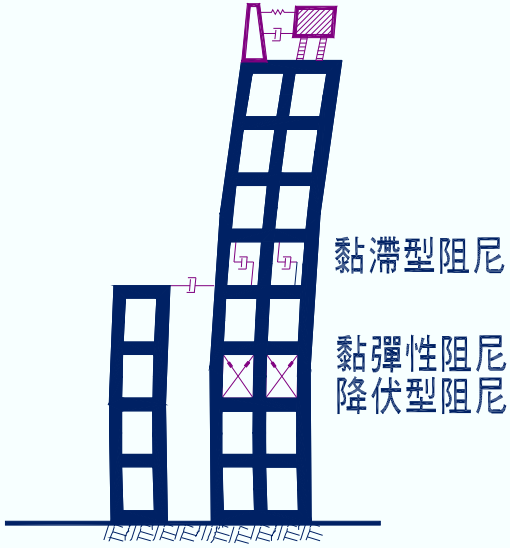
耐震設計方式

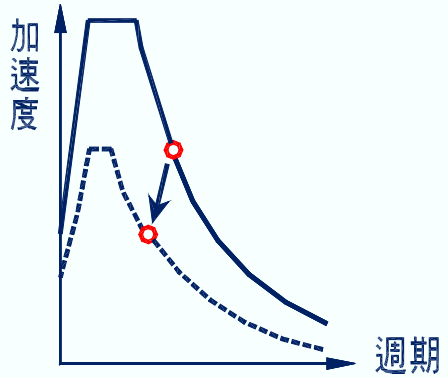
（1）韌性需求設計



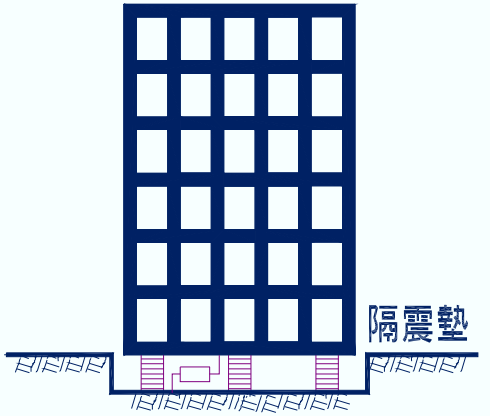


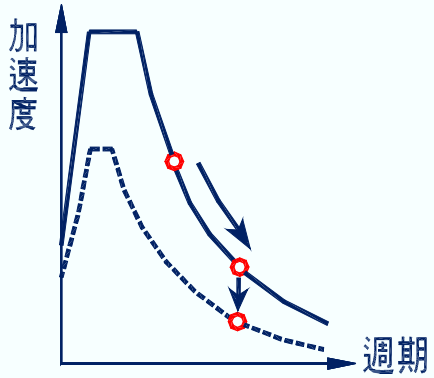
（2）減震設計





（3）隔震設計



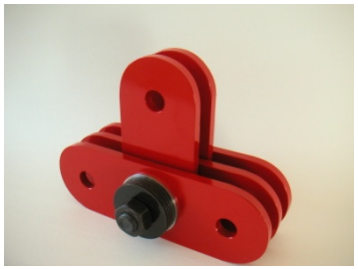


取自聯邦工程顧問資料

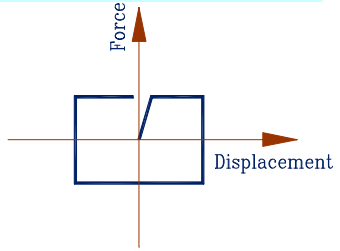
被 動 消 能 元 件 種 類

位移型:

（1）摩擦式





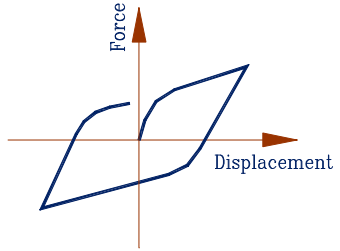


（2）金屬降伏式







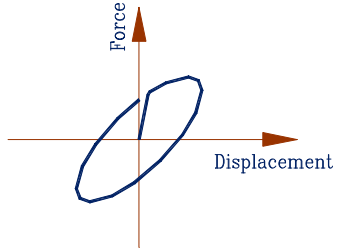


速度型:

（3）黏彈式

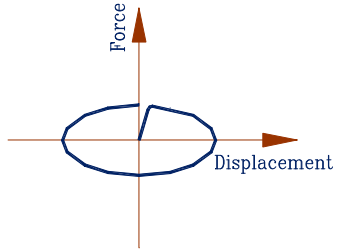






（4）黏滯式（Viscous）



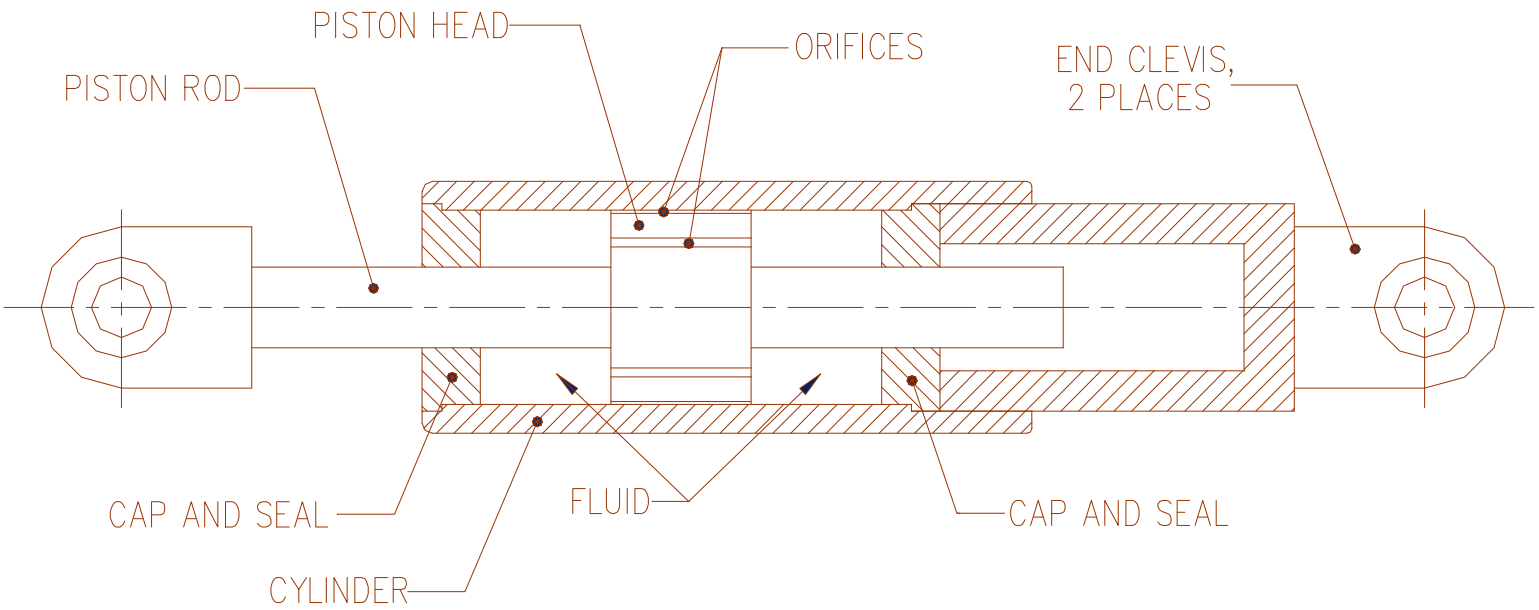


NTUT
NCREE

Viscous Dampers



Longitudinal Cross Section of A Fluid Damper



- The difference of the pressure between each side of the piston head results in the damping force.

- The damping constant of the damper can be determined by adjusting the configuration of the orifice of the piston head.

Viscous Dampers

Tai-Shin Bank









NTUT
NCREE

Experimental Validation

2000~2003
三層樓之兩跨乘兩跨空間鋼構架





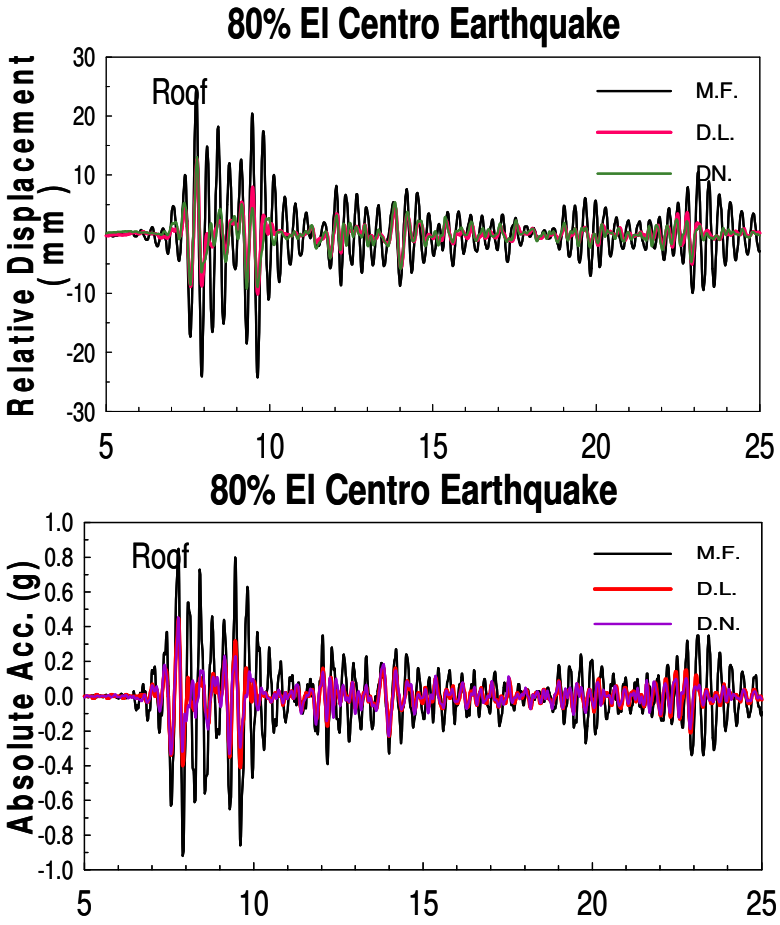
2004~2005
三層樓之兩跨乘兩跨空間鋼筋混凝土構架



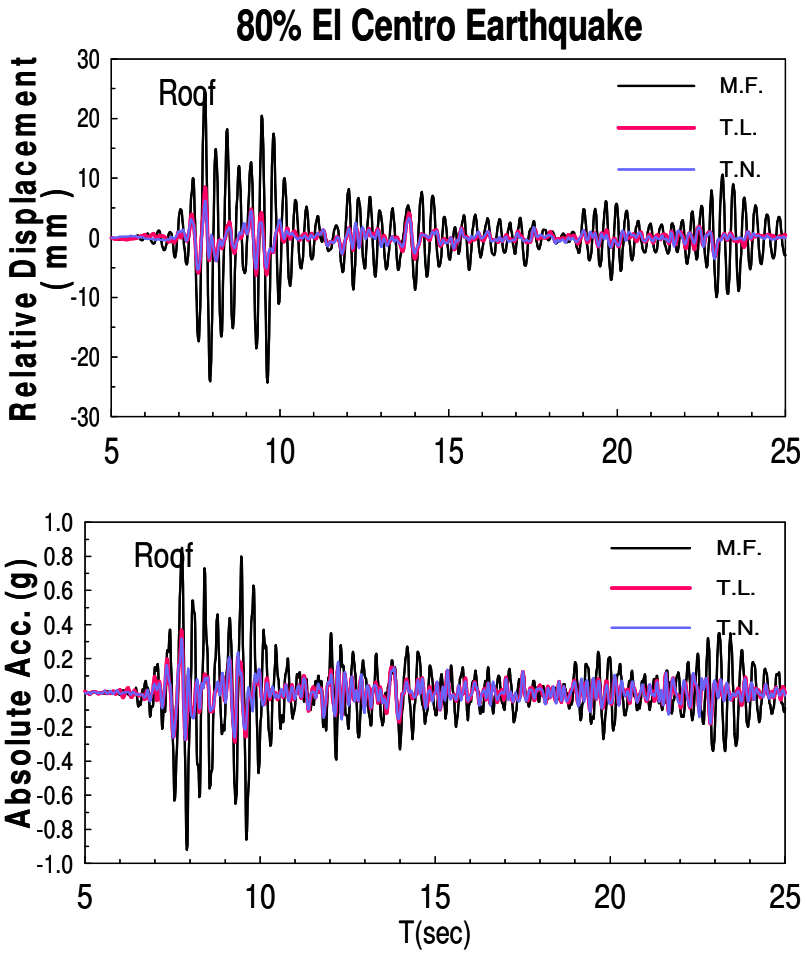
NTUT
NCREE

Response History

Diagonal-Damper-Brace



Toggle-Brace-Damper



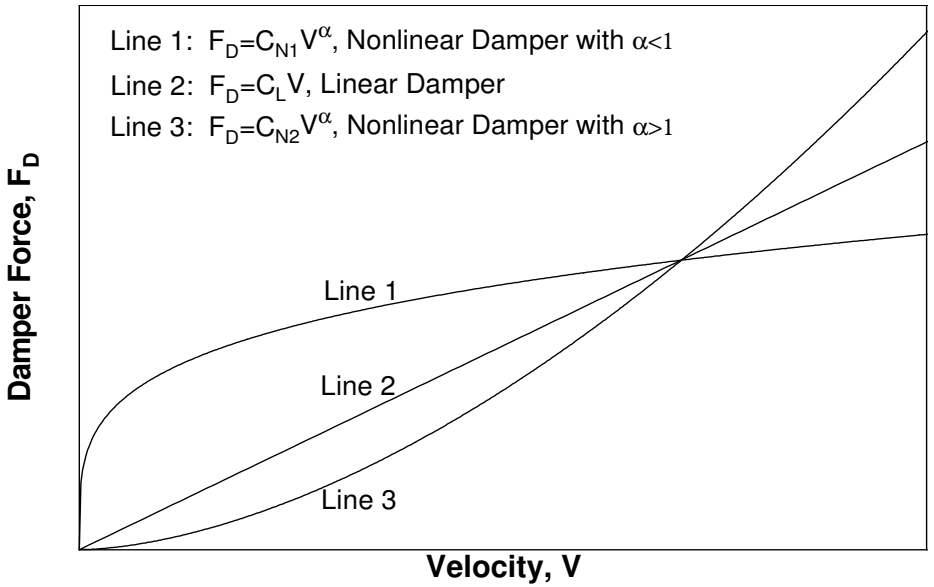
NTUT
NCREE

Force-Velocity Relationship of Viscous Dampers

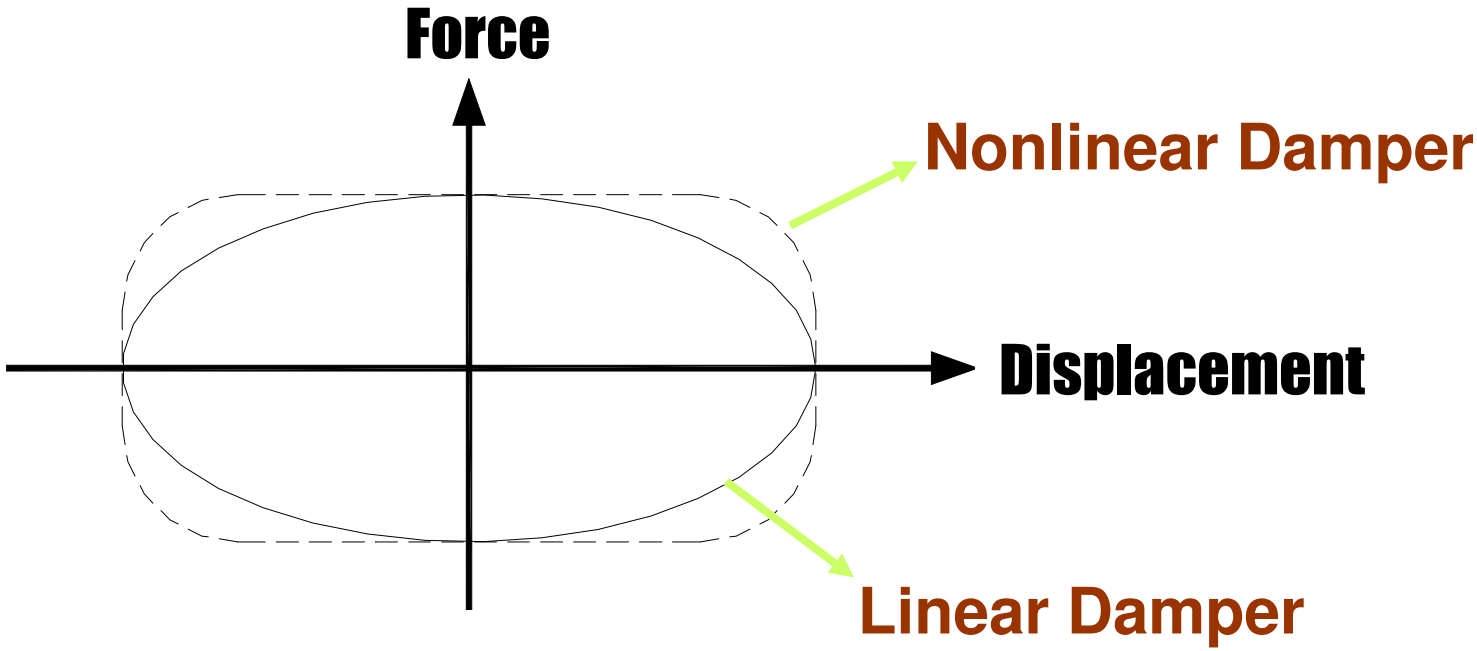
$$F_D = C\left|\dot{u}\right|^{\alpha}\operatorname{sgn}\left(\dot{u}\right)$$

$\alpha = 1$ **Linear Viscous Dampers**

$0 < \alpha < 1$ **Nonlinear Viscous Dampers**



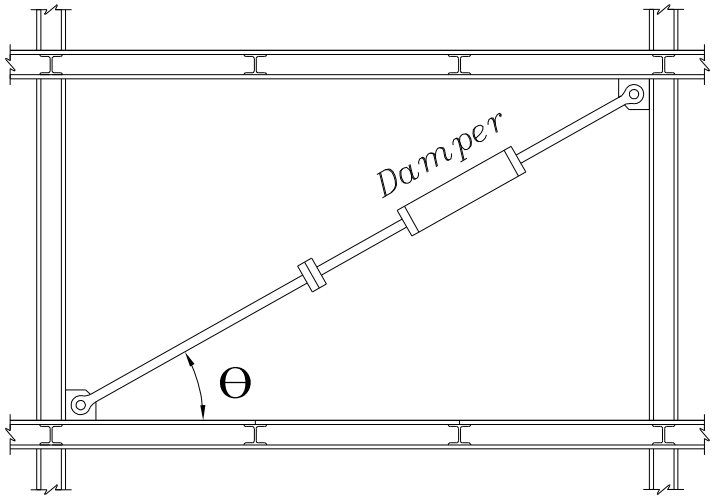
Hysteresis Loops of Viscous Dampers (Sinusoidal Motion)

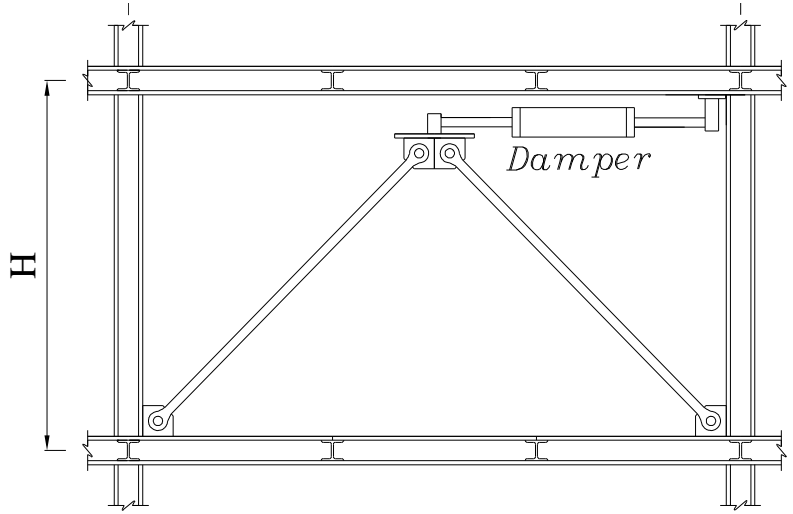


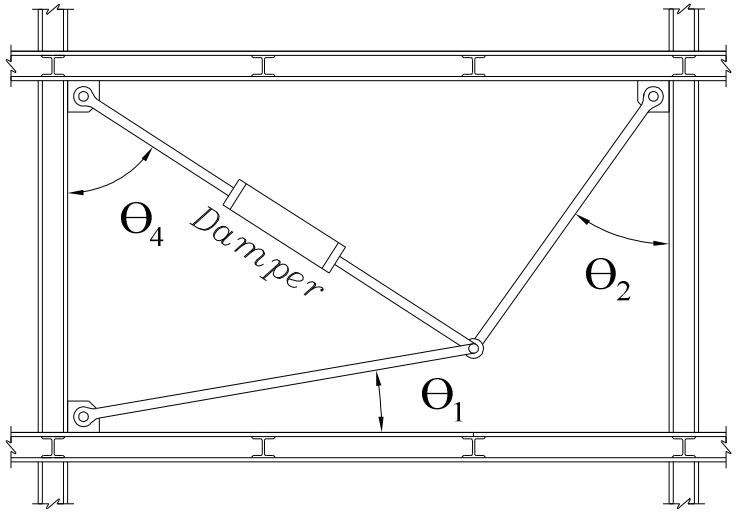
No storage stiffness!

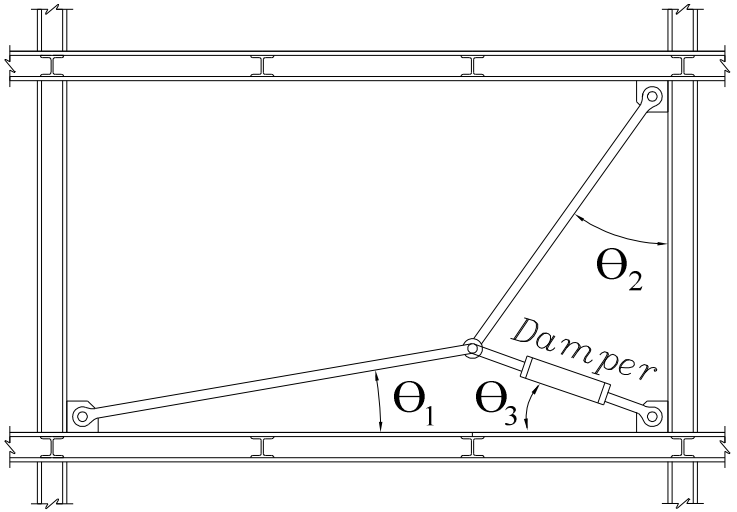
Viscous dampers won't change the natural frequency of the primary structure.

Typical Installation Scheme of Viscous Dampers



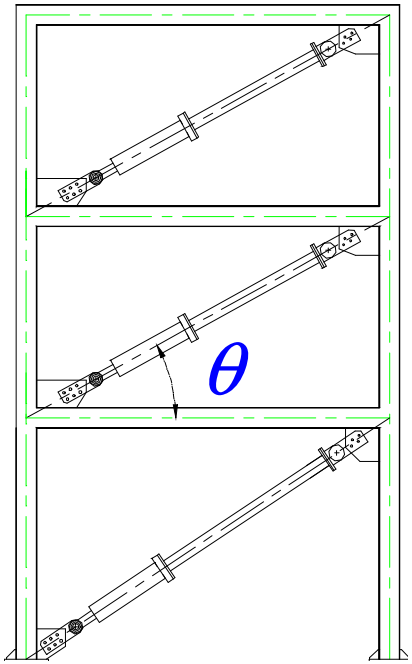






NTUT
NCREE

MDOF System with Linear Viscous Dampers



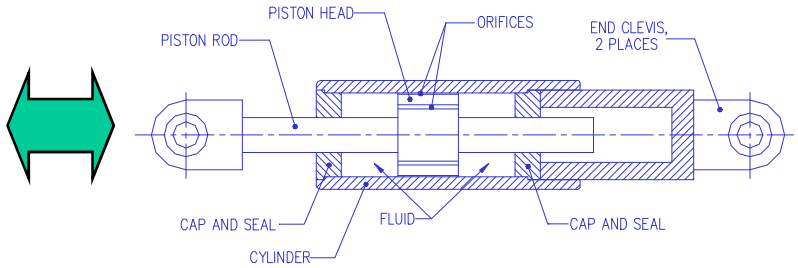
SDOF $\xi_d = \dfrac{W_D}{2\pi W_s}$

$$\xi_{eff} = \xi_0 + \xi_d$$

MDOF $\xi_d = \dfrac{\sum_{all\ \ dampers} W_D}{2\pi W_S}$

MDOF System with Linear Viscous Dampers

Energy Dissipated by Linear Viscous Dampers
(in one cycle of sinusoidal vibration)



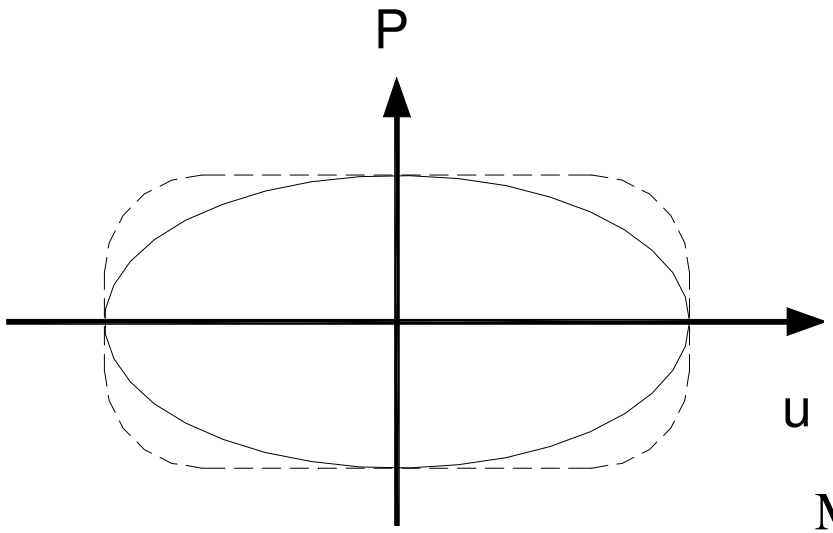
$$u = u_0 \sin \omega t$$

$$P = P_0 \sin(\omega t + \delta) = C\dot{u}$$

$$W_D = \oint F_D du = \oint C\dot{u} du = \int_0^{2\pi/\omega} C\dot{u}^2 \, dt$$

$$= C u_0^2 \omega^2 \int_0^{2\pi} \cos^2 \omega t \;\; d(\omega t)$$

$$= \pi C u_0^2 \omega$$



MDOF System with Linear Viscous Dampers

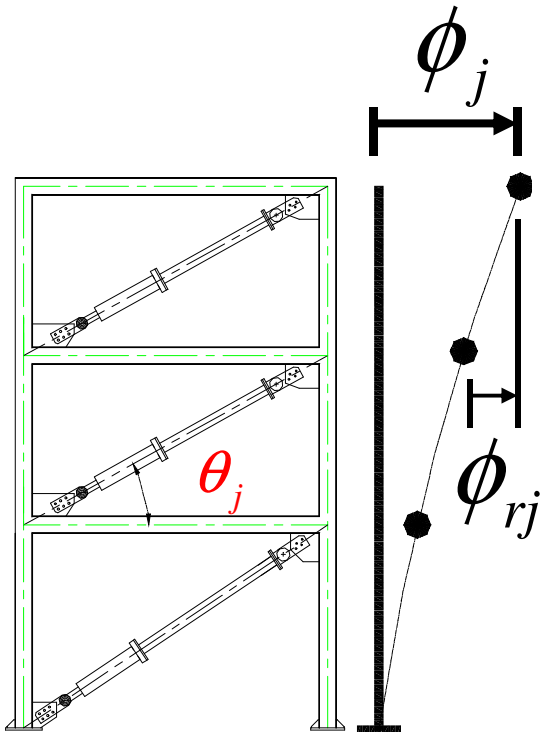
Considering the First Mode of Vibration

$$\sum_j W_j = \sum_j \pi C_j u_j^2 \omega_0 = \frac{2\pi^2}{T} \sum_j C_j \phi_{rj}^2 \cos^2 \theta_j$$

$$\xi_d = \frac{\sum_j W_j}{2\pi W_s}$$

$$W_s = \Phi_1^T [K] \Phi_1 = \Phi_1^T \omega^2 [m] \Phi_1$$

$$= \sum_i \omega^2 m_i \phi_i^2 = \frac{4\pi^2}{T^2} \sum_i m_i \phi_i^2$$



MDOF System with Linear Viscous Dampers

Effective Damping Ratio of A Structure with Linear Viscous Dampers

$$\xi_{eff} = \xi_0 + \frac{\frac{2\pi^2}{T}\sum_j C_j \phi_{rj}^2 \cos^2\theta_j}{2\pi\frac{4\pi^2}{T^2}\sum_i m_i \phi_i^2}$$

$$= \xi_0 + \frac{T\sum_j C_j \phi_{rj}^2 \cos^2\theta_j}{4\pi\sum_i m_i \phi_i^2}$$

皆為平方, 大小不影響

MDOF System with Linear Viscous Dampers



Energy Dissipated by Nonlinear Viscous Dampers

$$W_D = \oint F_D du = \int_0^{2\pi/\omega} F_D \dot{u} dt \quad \Leftarrow \quad F_D = C\dot{u}^{\alpha}$$

$$= \int_0^{2\pi/\omega} \left| C\dot{u}^{1+\alpha} \right| dt \quad \Leftarrow \quad \dot{u} = \omega u_0 \sin\omega t$$

$$= C(\omega u_0)^{1+\alpha} \int_0^{2\pi/\omega} \left| \sin^{1+\alpha} \omega t \right| dt$$

Let $\omega t = 2\theta \Rightarrow dt = \frac{2}{\omega} d\theta$

$$W_D = C(\omega u_0)^{1+\alpha} \frac{2}{\omega} \int_0^{\pi} \left| \sin^{1+\alpha} 2\theta \right| d\theta$$

$$= 2^{2+\alpha} C\omega^{\alpha} u_0^{1+\alpha} \int_0^{\pi/2} 2\sin^{1+\alpha}\theta \cos^{1+\alpha}\theta d\theta$$

$$= 2^{2+\alpha} C\omega^{\alpha} u_0^{1+\alpha} \frac{\Gamma^2(1+\alpha/2)}{\Gamma(2+\alpha)}$$

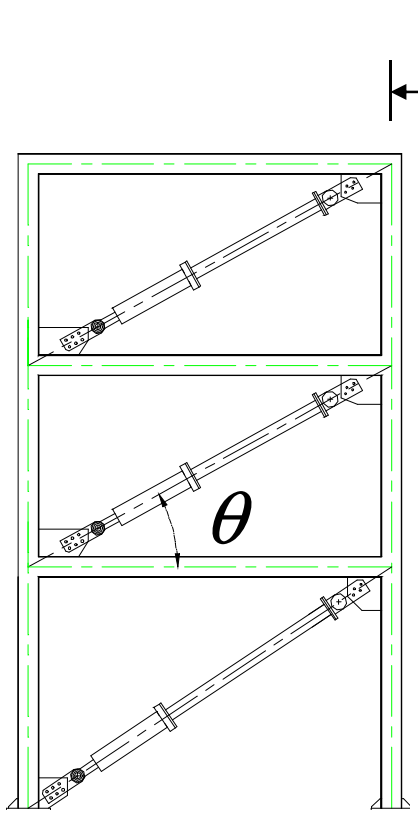
$$W_D = \lambda C \omega^{\alpha} u_0^{1+\alpha}$$

$$\lambda = 2^{2+\alpha} \frac{\Gamma^2(1+\alpha/2)}{\Gamma(2+\alpha)}$$

SDOF System with Nonlinear Viscous Dampers



Effective Damping Ratio of A Structure with Nonlinear Viscous Dampers



$$\xi_{eff} = \xi_0 + \frac{T^{2-\alpha}\sum_j \lambda C_j \phi_{rj}^{1+\alpha} \cos^{1+\alpha}\theta_j}{(2\pi)^{3-\alpha} D^{1-\alpha} \sum_i m_i \phi_i^2}$$

$$1-\alpha = 2-(1+\alpha)$$

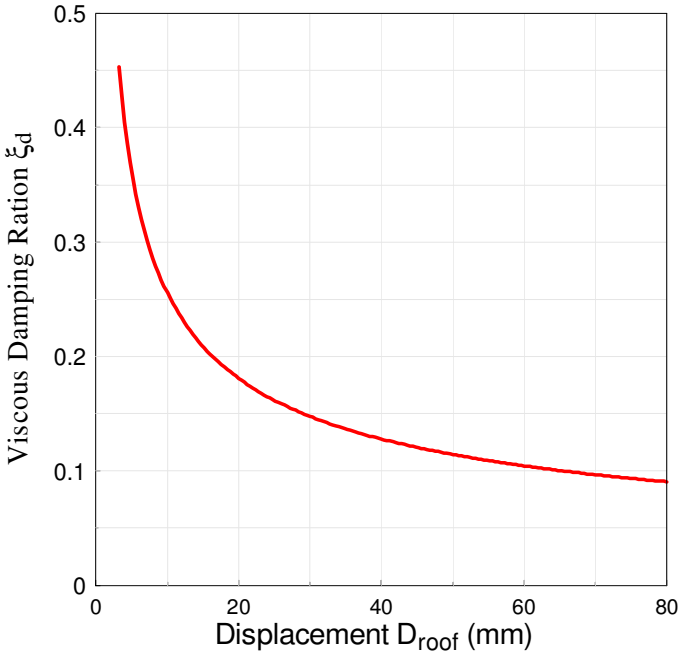
Displacement Dependent

MDOF System with Nonlinear Viscous Dampers

Shaking Table Test







NTUT
NCREE

黏性阻尼器之設計 — Elastic Response

$$\xi_d = \frac{T\sum_j C_j \phi_{rj}^2 \cos^2\theta_j}{4\pi\sum_i m_i\phi_i^2}$$

⇐ Linear Damper

$$\xi_d = \frac{T^{2-\alpha}\sum_j \lambda C_j \phi_{rj}^{1+\alpha}\cos^{1+\alpha}\theta_j}{(2\pi)^{3-\alpha} D^{1-\alpha}\sum_i m_i\phi_i^2}$$

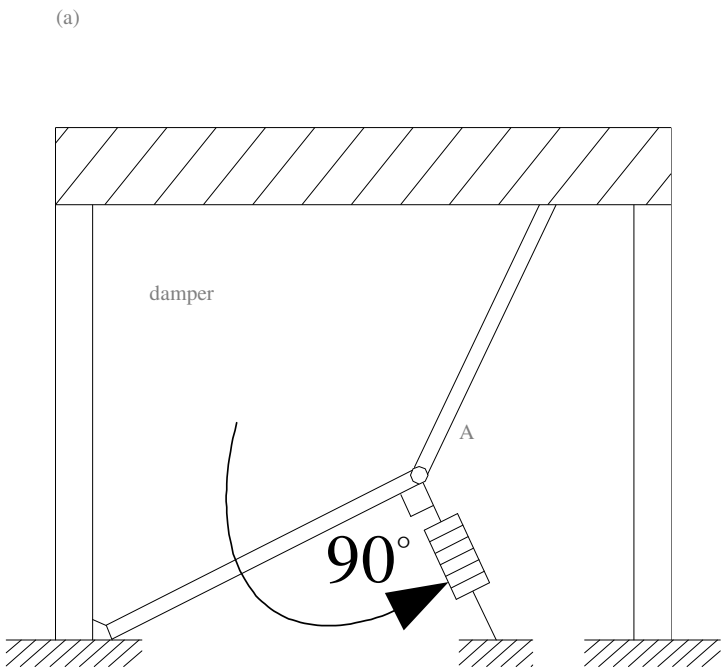
⇐ Nonlinear Damper

位移設計法

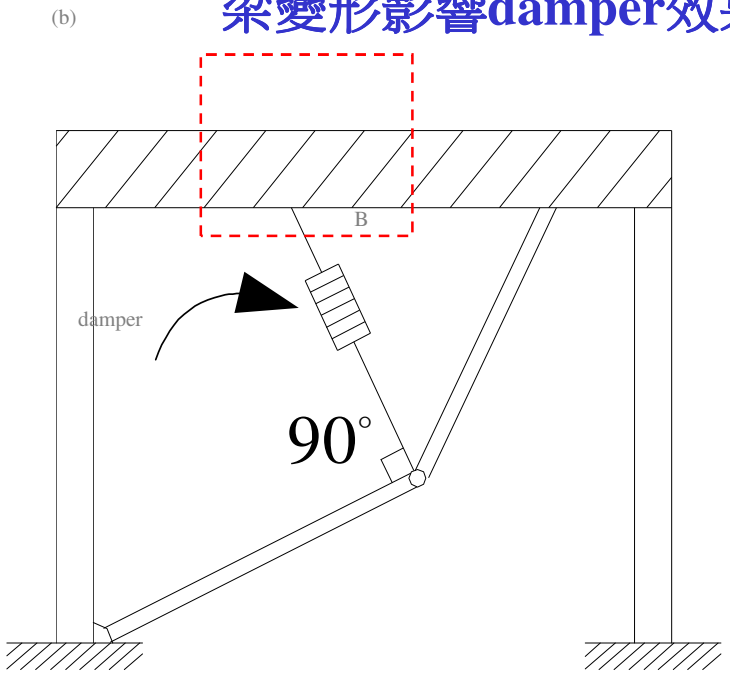
$$S_d = \frac{g}{4\pi^2}\frac{S_{aD} I T_1^2}{(1.4\alpha_y F_u)B} \qquad D = \Gamma_1 S_d$$



Toggle-Brace-Dampers



梁變形影響damper效果

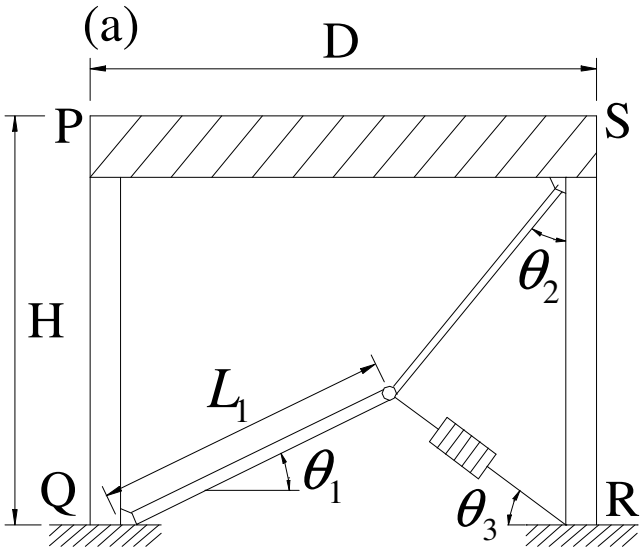


Lower Toggle-Brace Damper

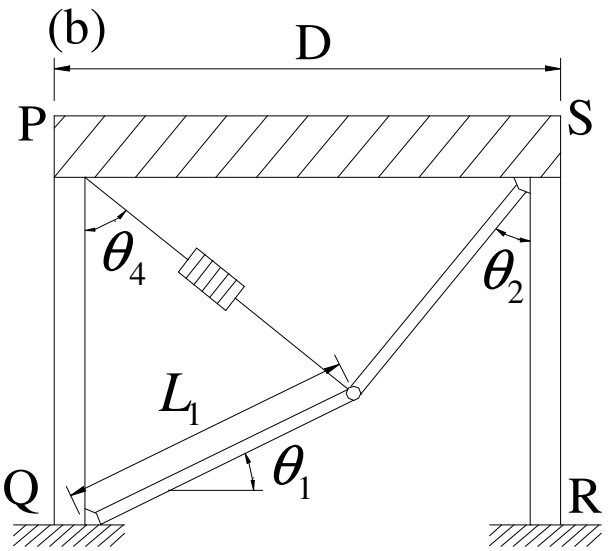
Upper Toggle-Brace-Damper

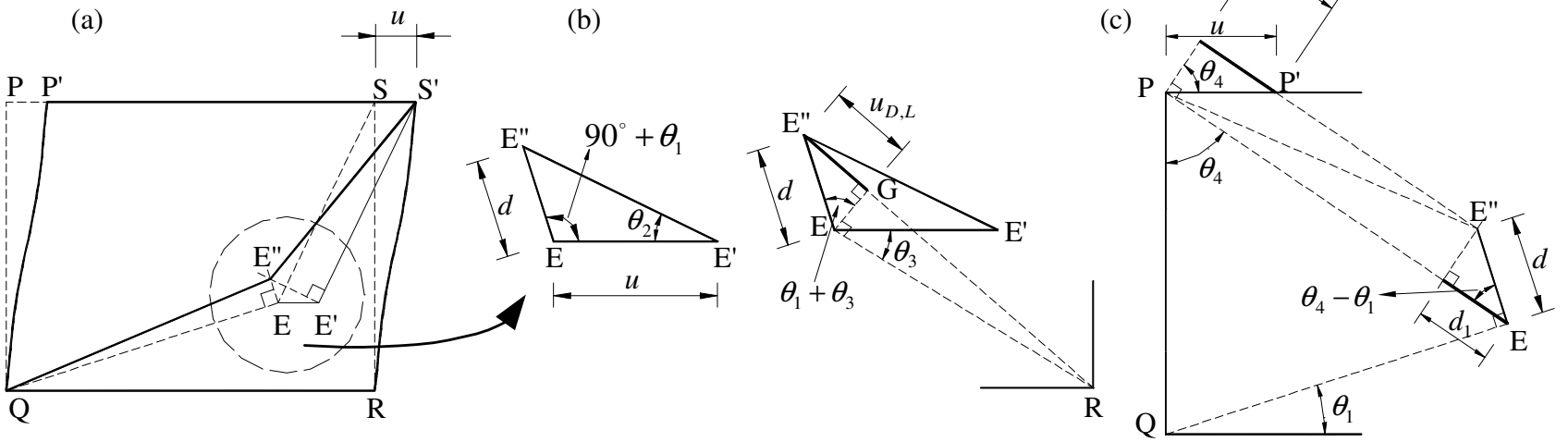
MCEER

Lower Toggle-Brace-Damper



Upper Toggle-Brace-Damper





Linear Toggle-Brace-Damper

$$\xi_d = \frac{T\sum_j C_j \phi_{rj}^2 f_j^{\,2}}{4\pi \sum_i m_i \phi_i^2}$$

Nonlinear Toggle-Brace-Damper

$$\xi_d = \frac{T^{2-\alpha}\lambda \sum_j C_j (f_j \phi_{rj})^{1+\alpha}}{(2\pi)^{3-\alpha} A^{1-\alpha} \sum_i m_i \phi_i^{\,2}}$$

$$f_U = \frac{u_{D,U}}{u} = \frac{\sin\theta_2}{\cos(\theta_1+\theta_2)}\cos(\theta_4-\theta_1)+\sin\theta_4$$

(Upper Toggle)

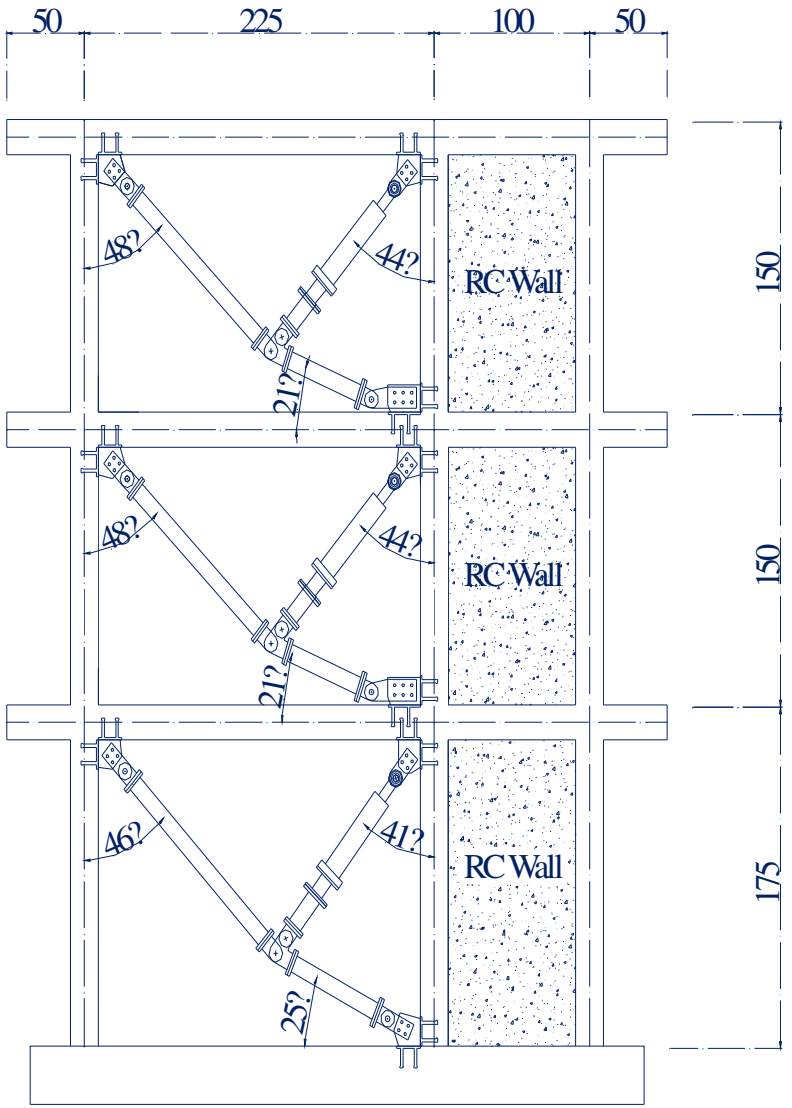
增加damper效果, 但亦增加斜撐受力, 需注意面外挫屈

$$f_L = \frac{u_{D,L}}{u} = \frac{\sin\theta_2 \sin(\theta_1+\theta_3)}{\cos(\theta_1+\theta_2)}$$

(Lower Toggle)



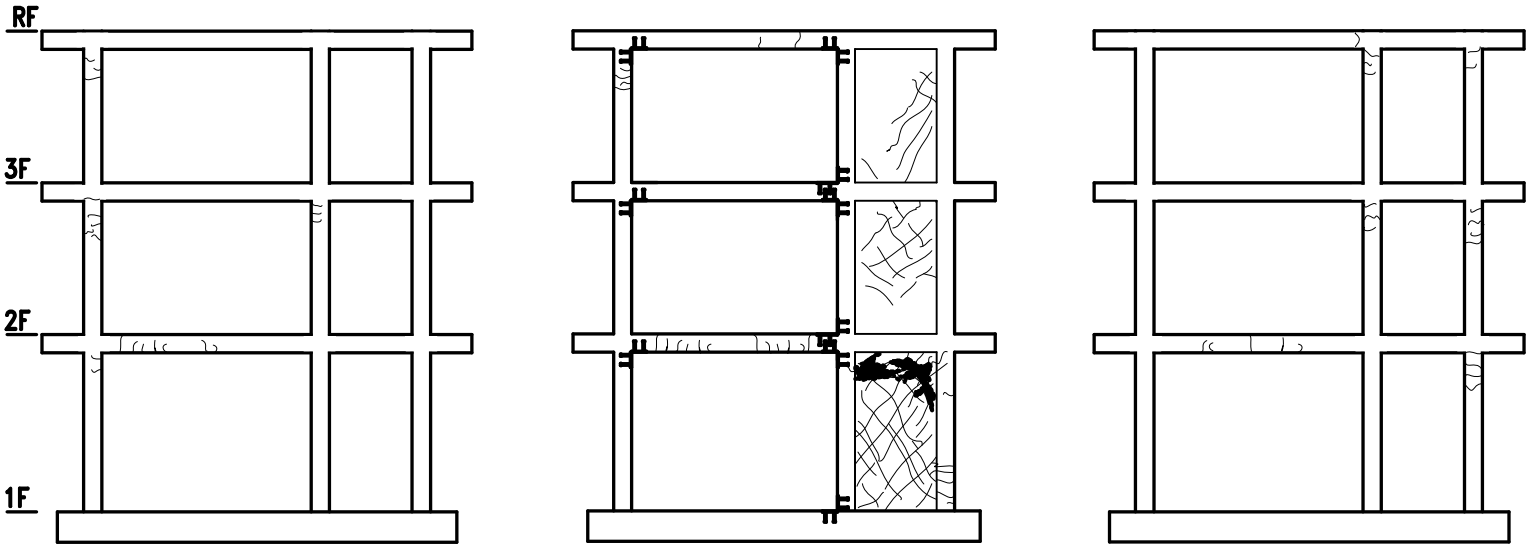



50
225
100
50
150
150
175
RC Wall
RC Wall
RC Wall
48?
44?
21?
48?
44?
21?
46?
41?
25?

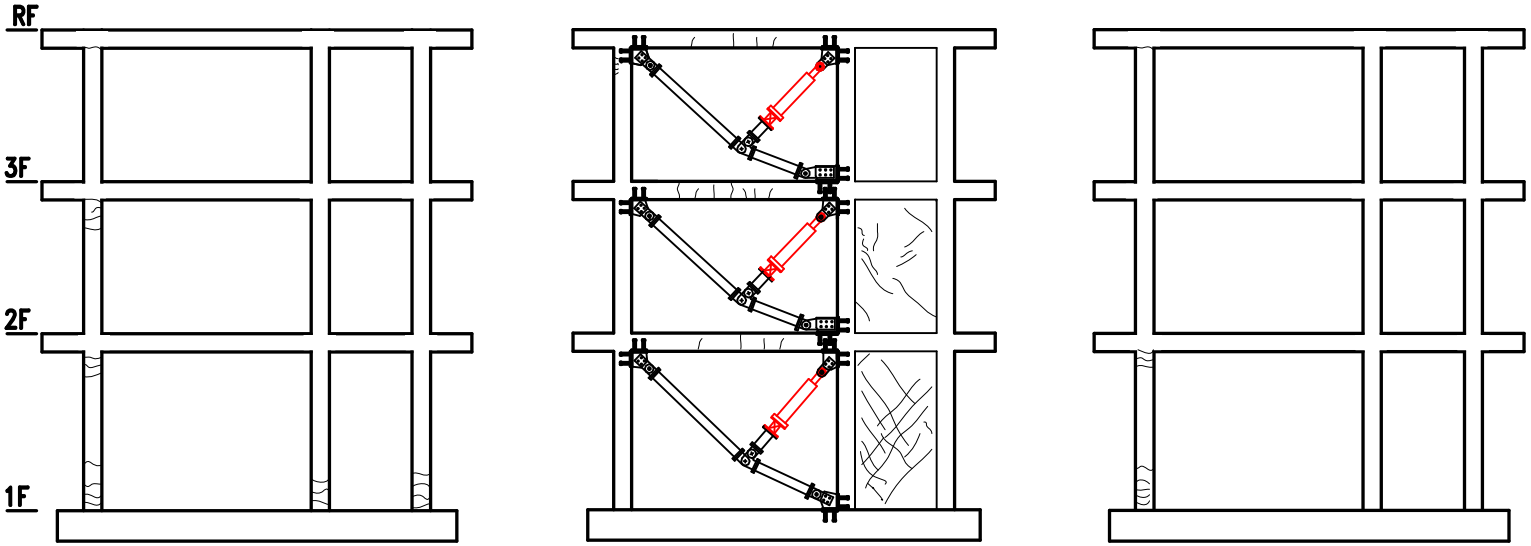
NTUT
NCREE

(a) w/o dampers

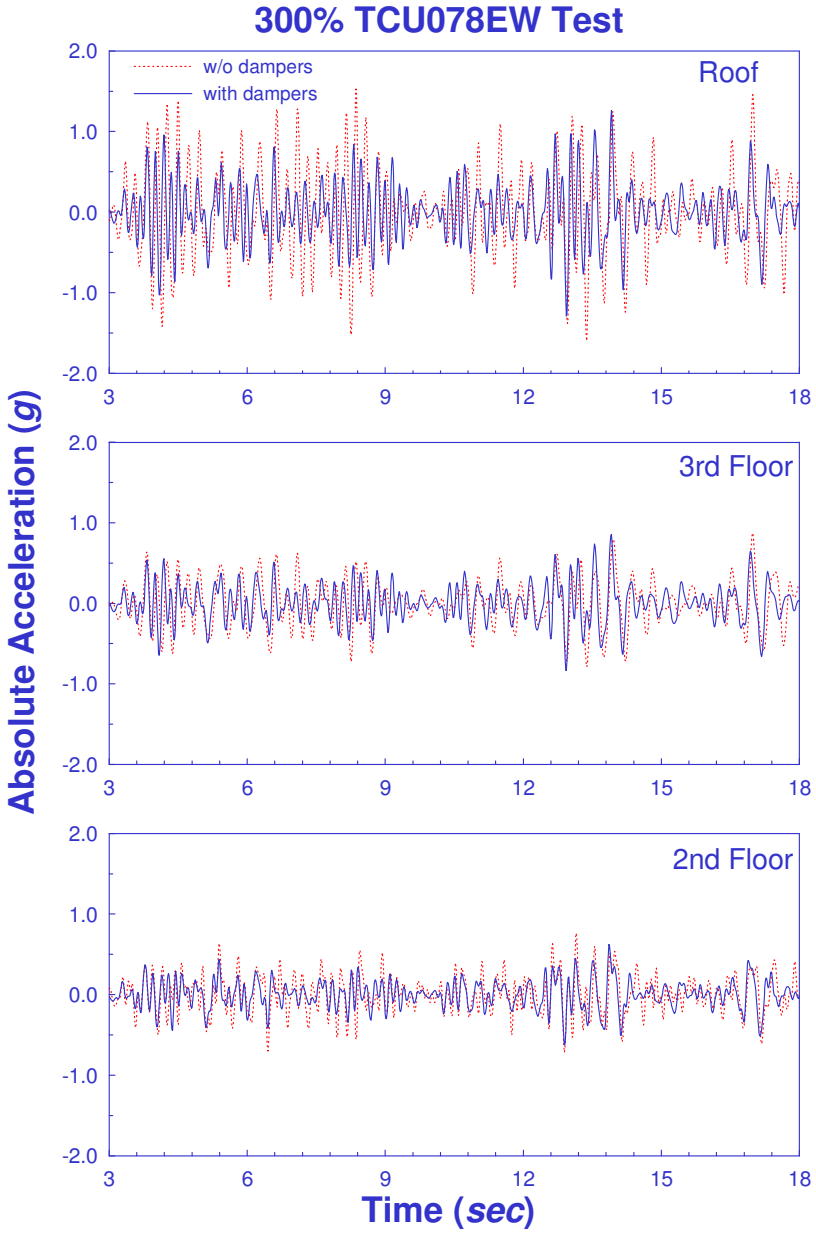
After 300% TCU078

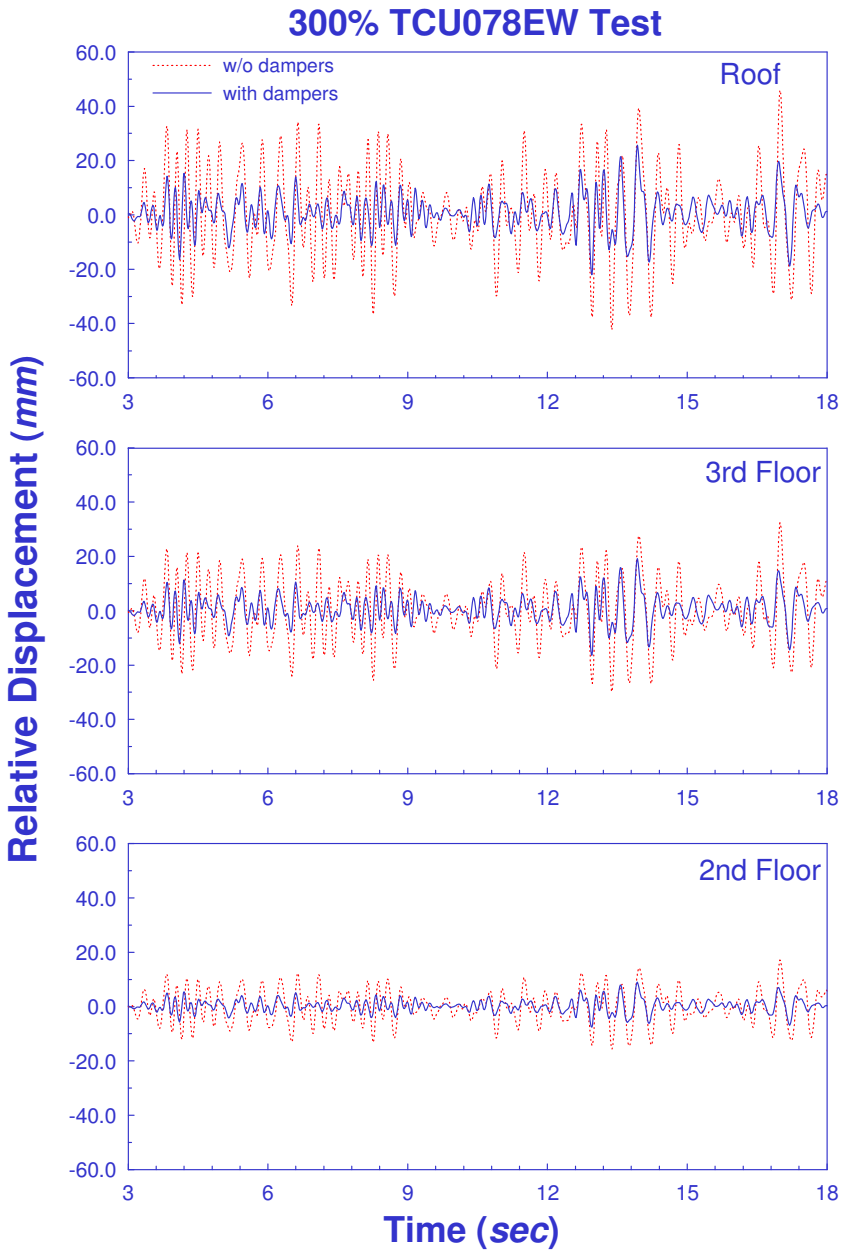


(b) with dampers



NTUT
NCREE


300% TCU078EW Test
w/o dampers
with dampers
Roof
3rd Floor
2nd Floor
Absolute Acceleration (g)
Time (sec)


300% TCU078EW Test
w/o dampers
with dampers
Roof
3rd Floor
2nd Floor
Relative Displacement (mm)
Time (sec)

NTUT
NCREE

Viscous Damper 之設計



線性靜力分析程序

- (第一步驟) 決定設計阻尼比(如10%)
- inherent damping β (5%) + viscous damping β_v (10%) = effective damping β_{eff} (15%)
- 含消能元件結構構架於最大考量地震下保持彈性 (hysteretic damping = 0)

- (第二步驟) 構架耐震設計
- 以設計地震考慮β_{eff} (15%)阻尼修正因子折減之基底剪力設計
- 設結構保持彈性

- (第三步驟) 地震豎向力分佈
- 考慮整體結構等效阻尼比β_{eff}，依據規範將最大考量地震作用基底剪力進行豎向力分佈

- (第四步驟)垂直持續載重+側向靜力分析求得各層樓之側向層間變位

- (第五步驟) 設計阻尼常數C值
- 利用步驟4分析之各層樓層間變位，求各層阻尼器之軸向變形，配合結構基本振態角頻率ω可求得各層阻尼器之速度值(V)
- 以下式計算均勻分配(uniform distribution)決定各層樓之C值

$$\beta_V = \frac{\sum_j W_{Vj}}{4\pi W_k} \qquad \sum W_{Vj} = \left(\frac{2\pi}{T_S}\right)^{\alpha} \sum \lambda C_j \left|\Delta_{rj} \cos\theta_j\right|^{1+\alpha} \qquad W_K = \frac{1}{2}\sum_i F_i u_i$$

- (第六步驟) 多次迭代後, 決定Damper最大出力與衝程容量

- 速度型阻尼器之力學行為與速度相關，理應進行動力分析程序設計較為適當
- 建議初步設計完成後，應至少進行線性動力分析作為檢核



線性靜力分析程序 (考慮結構本身遲滯消能)

$$\beta_{eff} = \beta + \frac{\sum_j W_{Vj} + \sum_i W_{F_i}}{4\pi W_k}$$

$$\beta_{eff} = \beta + \frac{\pi \sum_j C_j u_{rj}^2 \cos^2 \theta_j + T/(2\pi) \sum_i W_{F_i}}{T \sum_i F_i u_i}$$



加裝Viscous Damper 動力歷時反應分析

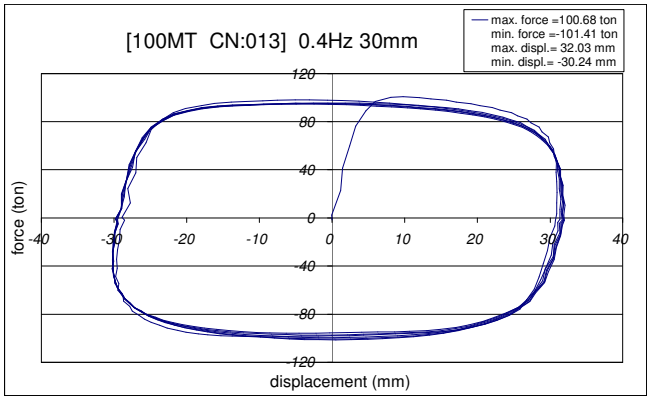


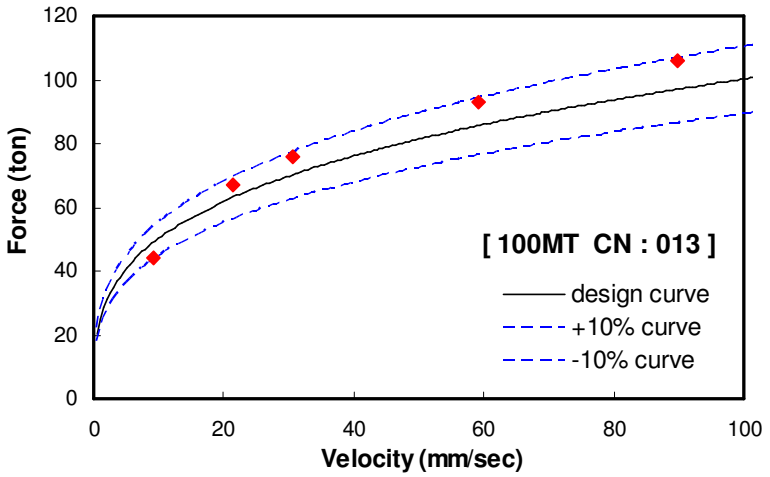
Viscous Damper 測試

試驗要求: 阻尼器的速度-出力曲線中，在各種不同速度情況下，出力之試驗值與設計值差異不得超過±15%。







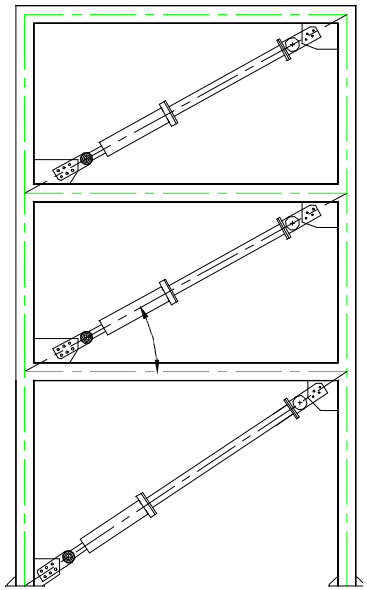


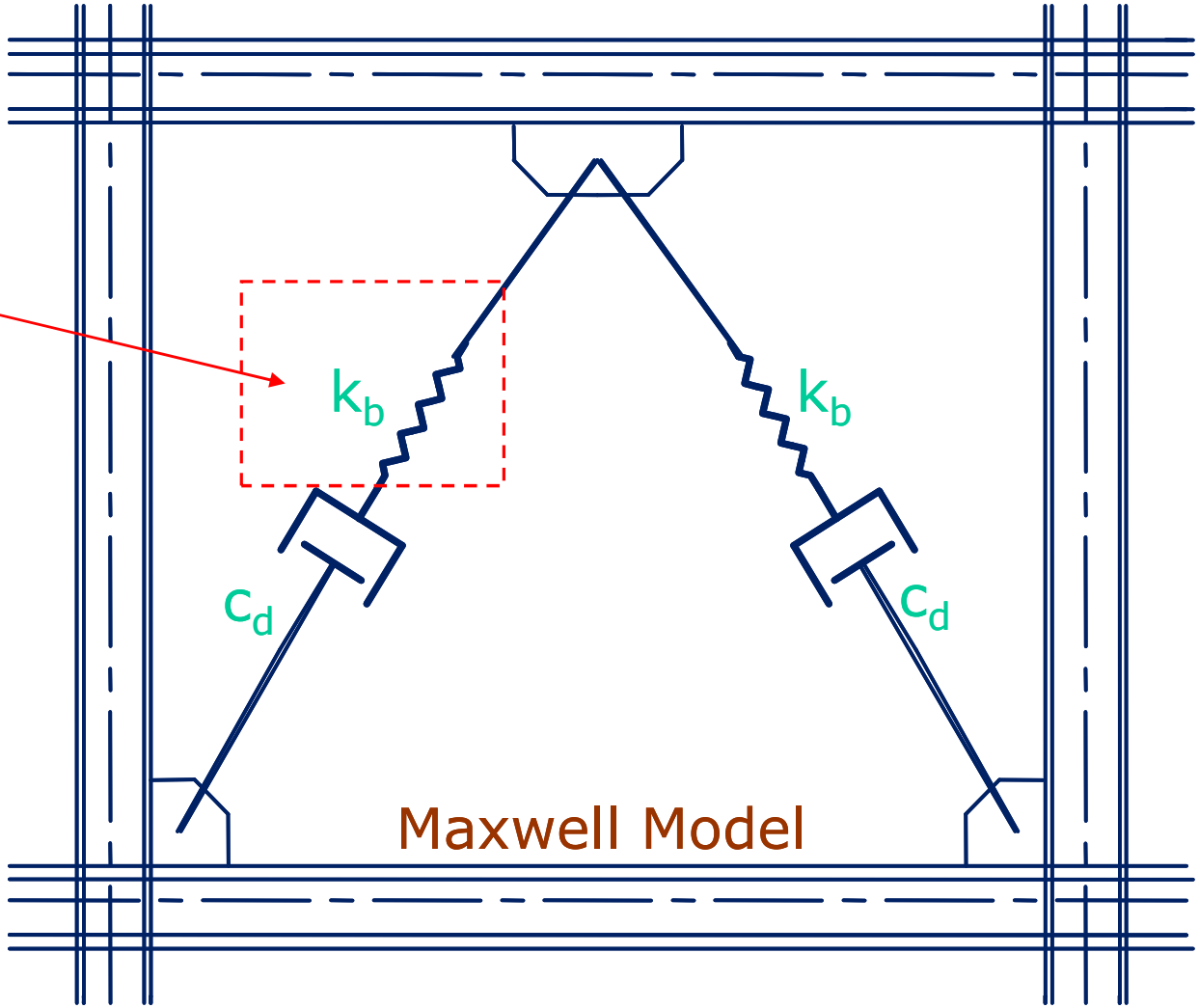
NTUT
NCREE

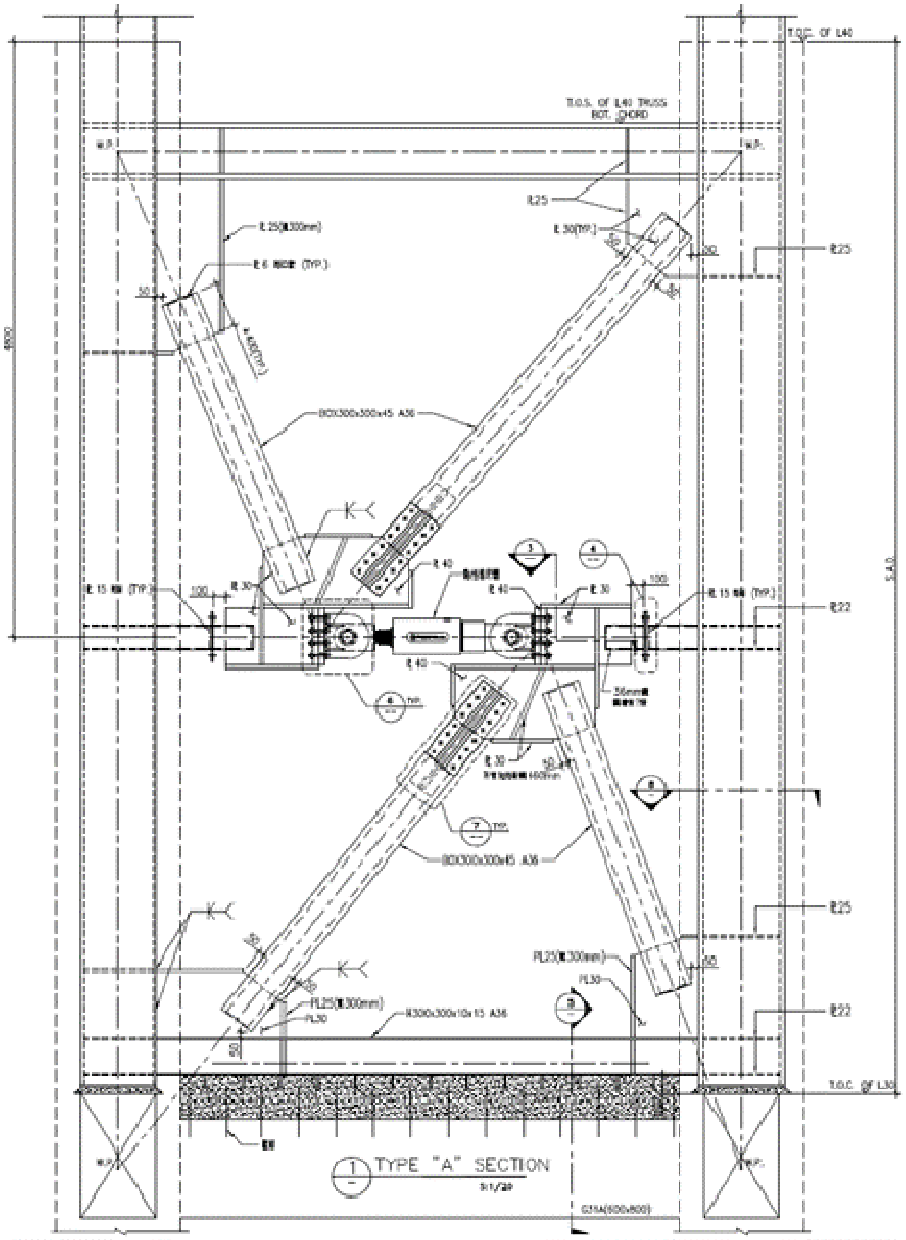
FVD 模擬模式

斜撐勁度

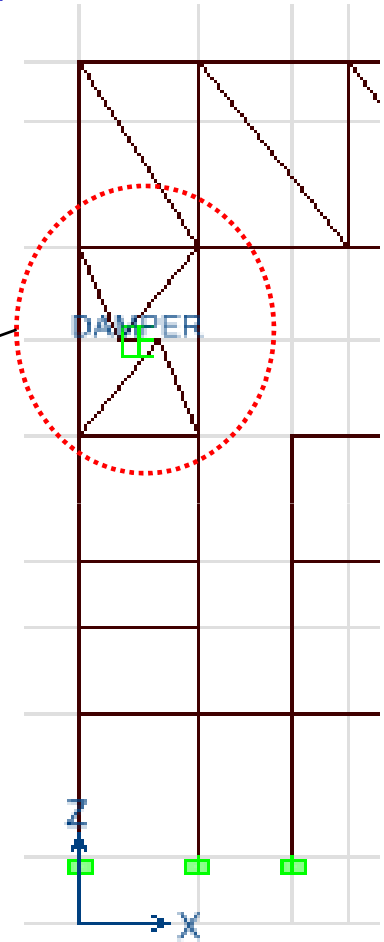
- 影響反應甚大
- 需準確模擬







斜撐勁度 影響反應甚大, 需準確模擬



NTUT
NCREE

補強設計

- 輸入地震: 採日本阪神地震加速度記錄

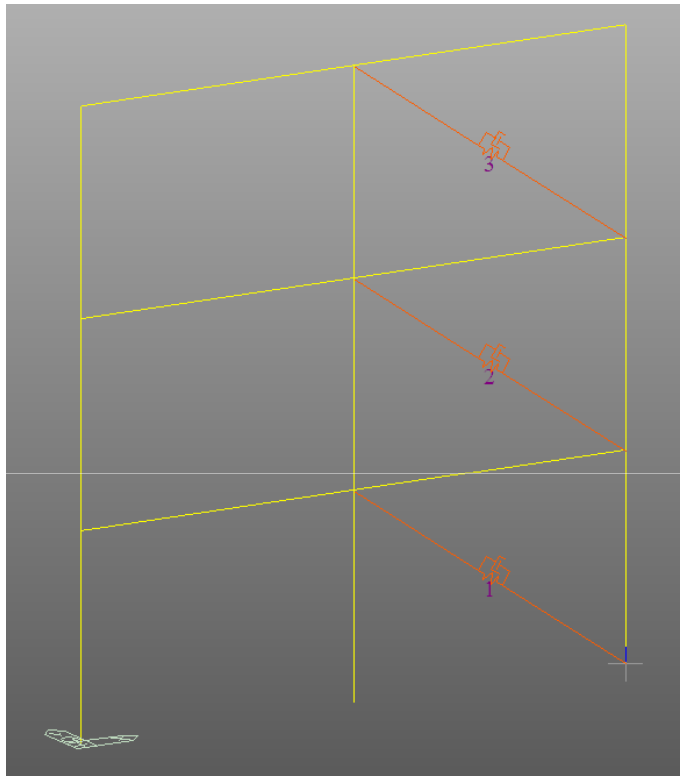
$\phi = [0.457, 0.326, 0.135]$

$\alpha = 0.3$

有效阻尼比提升10%

設計位移 D = 10 cm

$\theta = 35^{o}$



阻尼器特性:

$F = 24\ V^{0.3}$

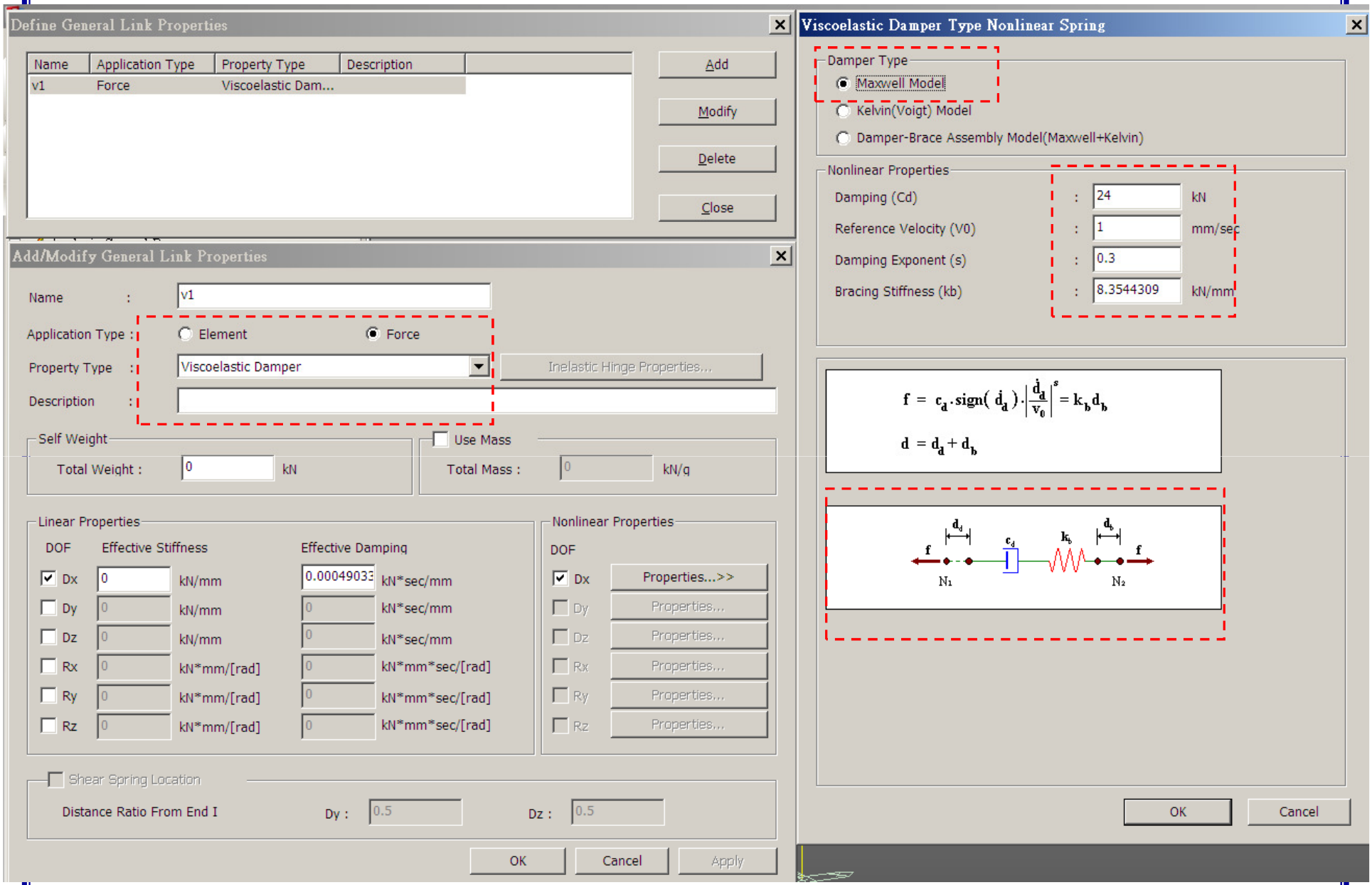
F= 阻尼力(KN, 最大出力約140KN)

V=速度(mm/s)

阻尼器配置: 3支

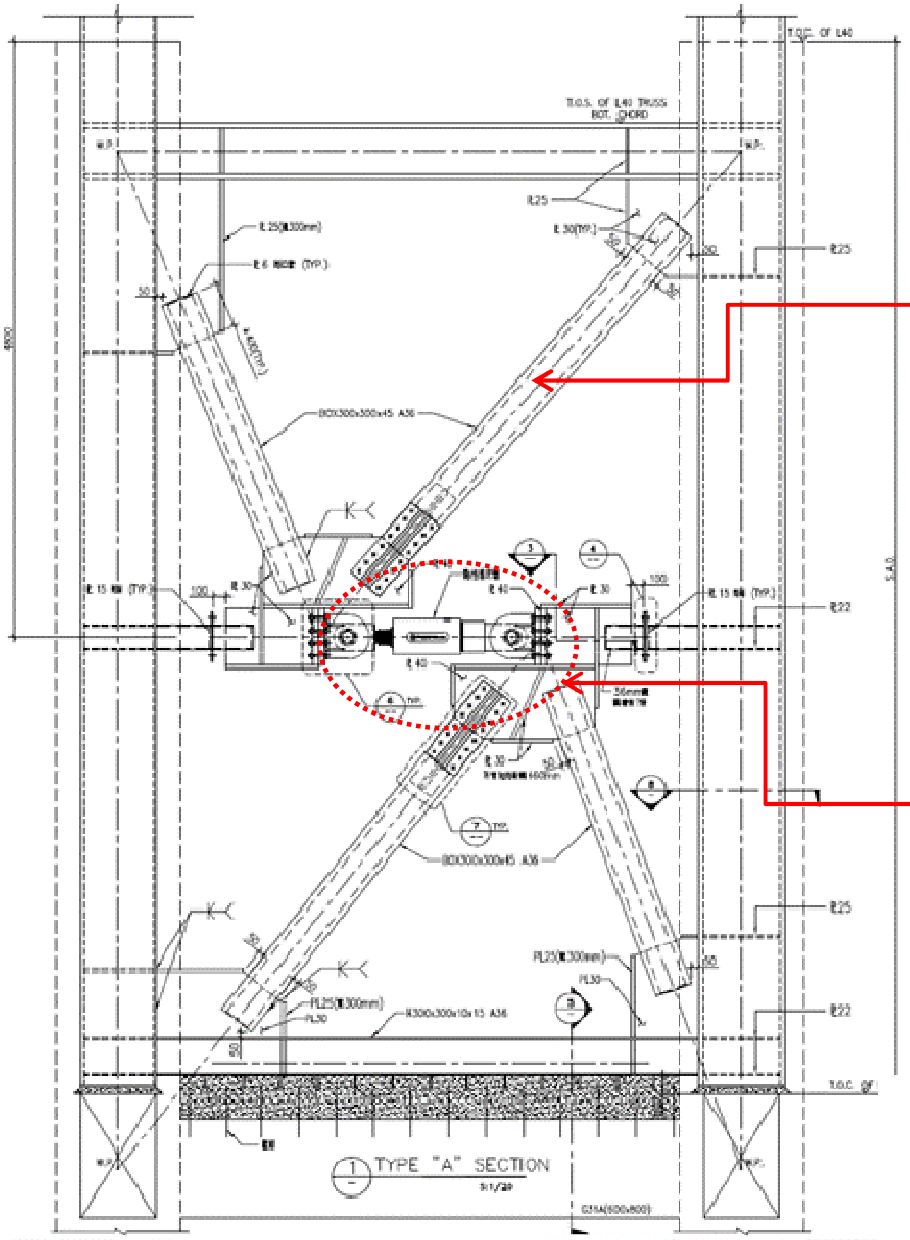
斜撐剛度 k = 8.35 kN/mm

$$\xi_{eff} = \xi_0 + \frac{T^{2-\alpha}\sum_j \lambda C_j \phi_{rj}^{1+\alpha} \cos^{1+\alpha}\theta_j}{(2\pi)^{3-\alpha} D^{1-\alpha} \sum_i m_i \phi_i^2}$$


Define General Link Properties
Name
Application Type
Property Type
Description
v1
Force
Viscoelastic Dam...
Add
Modify
Delete
Close
Add/Modify General Link Properties
Name : v1
Application Type : Element Force
Property Type : Viscoelastic Damper
Inelastic Hinge Properties...
Description :
Self Weight
Total Weight : 0 kN
Use Mass
Total Mass : 0 kN/g
Linear Properties
DOF
Effective Stiffness
Effective Damping
Dx 0 kN/mm 0.00049033 kN*sec/mm
Dy 0 kN/mm 0 kN*sec/mm
Dz 0 kN/mm 0 kN*sec/mm
Rx 0 kN*mm/[rad] 0 kN*mm*sec/[rad]
Ry 0 kN*mm/[rad] 0 kN*mm*sec/[rad]
Rz 0 kN*mm/[rad] 0 kN*mm*sec/[rad]
Nonlinear Properties
DOF
Dx Properties...>>
Dy Properties...
Dz Properties...
Rx Properties...
Ry Properties...
Rz Properties...
Shear Spring Location
Distance Ratio From End I
Dy : 0.5
Dz : 0.5
OK
Cancel
Apply
Viscoelastic Damper Type Nonlinear Spring
Damper Type
Maxwell Model
Kelvin(Voigt) Model
Damper-Brace Assembly Model(Maxwell+Kelvin)
Nonlinear Properties
Damping (Cd) : 24 kN
Reference Velocity (V0) : 1 mm/sec
Damping Exponent (s) : 0.3
Bracing Stiffness (kb) : 8.3544309 kN/mm
f = c_d · sign(ḋ_d) · |ḋ_d / v_0|^s = k_b d_b
d = d_d + d_b
f
d_d
c_d
k_b
d_b
f
N1
N2
OK
Cancel

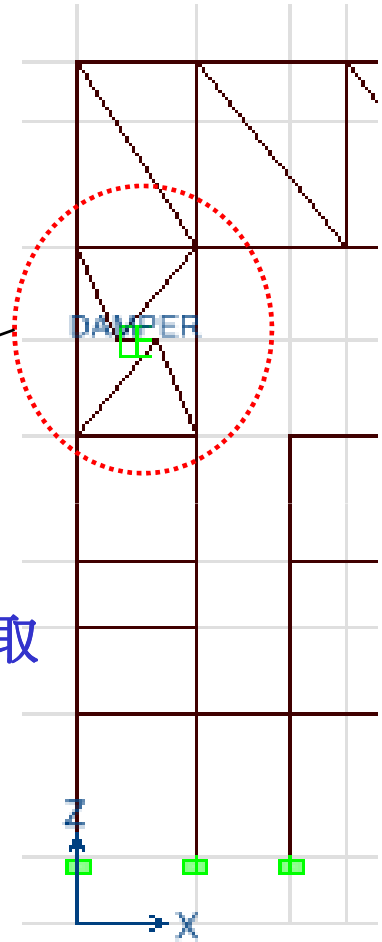
NTUT
NCREE

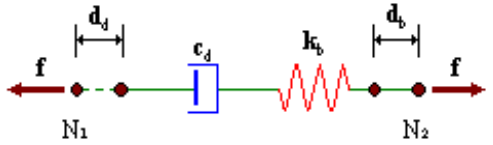
斜撐勁度 影響反應甚大, 需準確模擬



斜撐勁度與束制條件依實模擬

Damper之kb取一相對大值

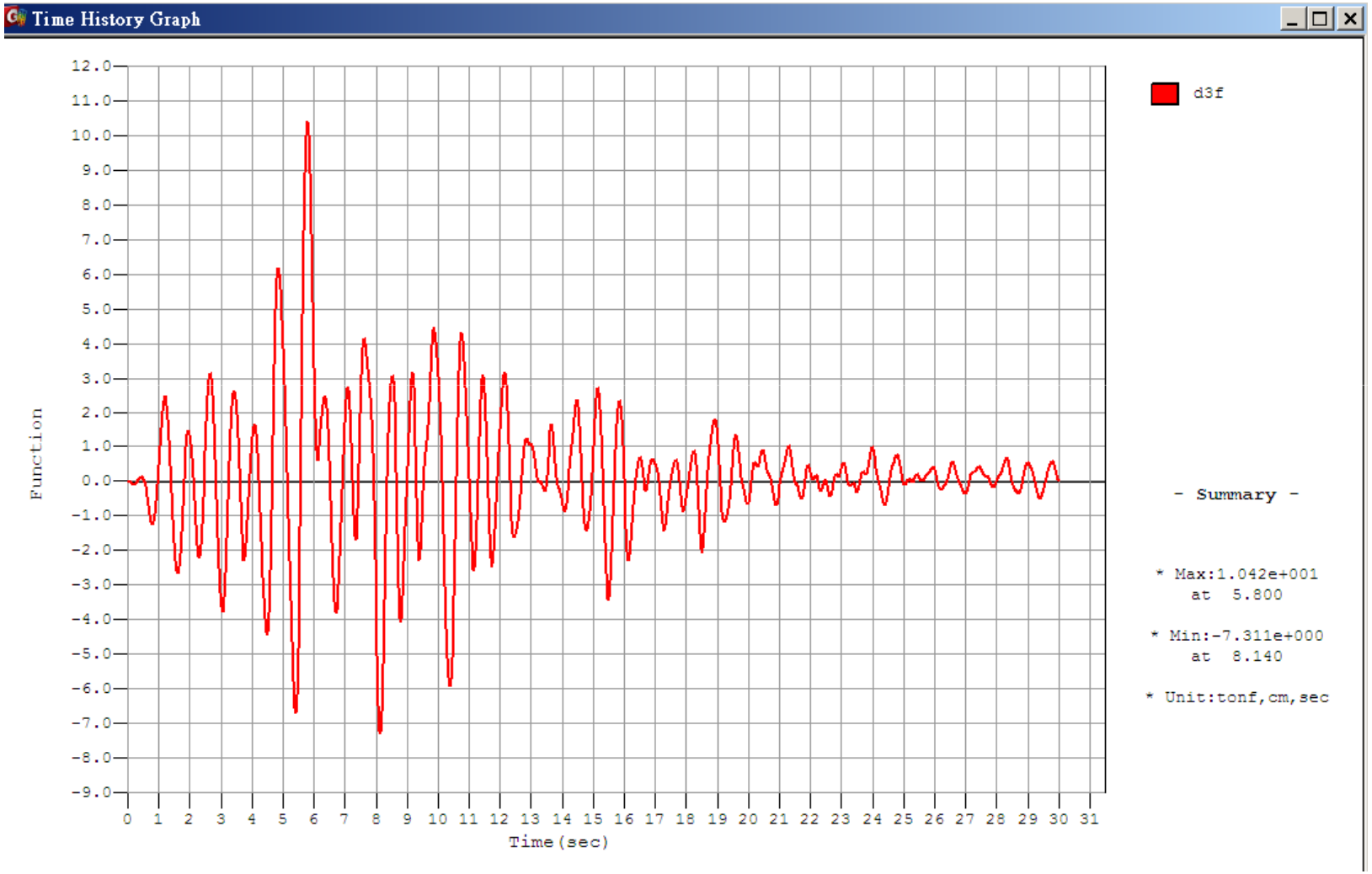




NTUT
NCREE

屋頂位移歷時

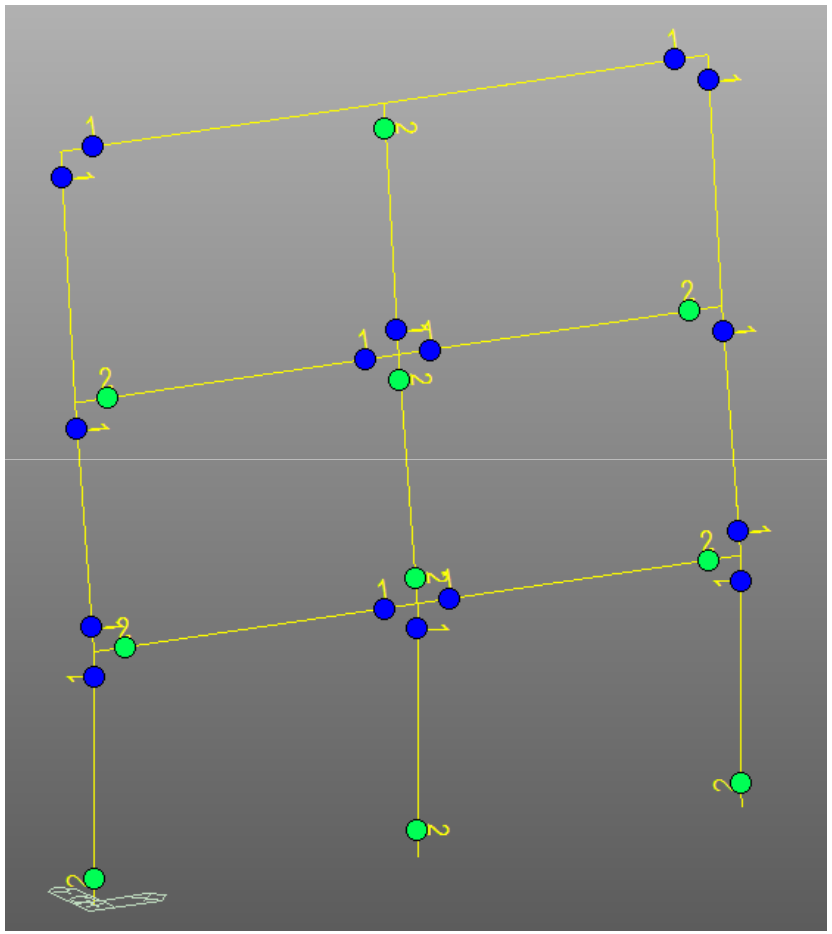
Max. displacement = 10.4 cm, 與設計位移相差不多



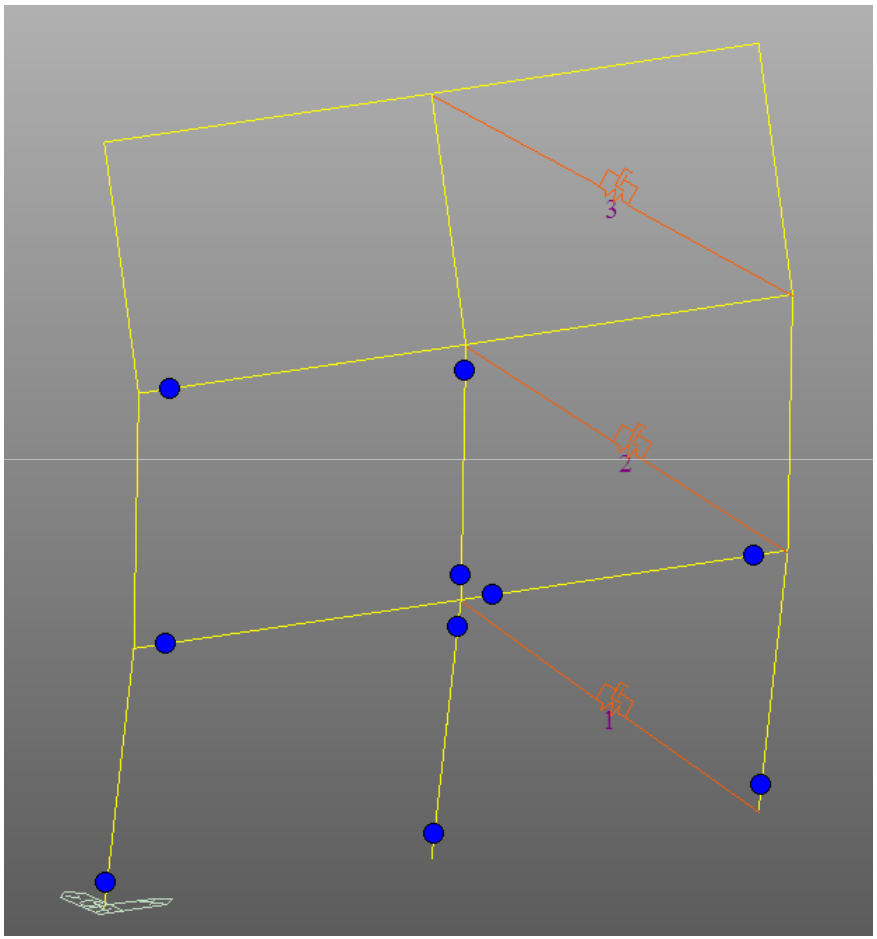
NTUT
NCREE

Plastic hinge 狀態

Bare frame

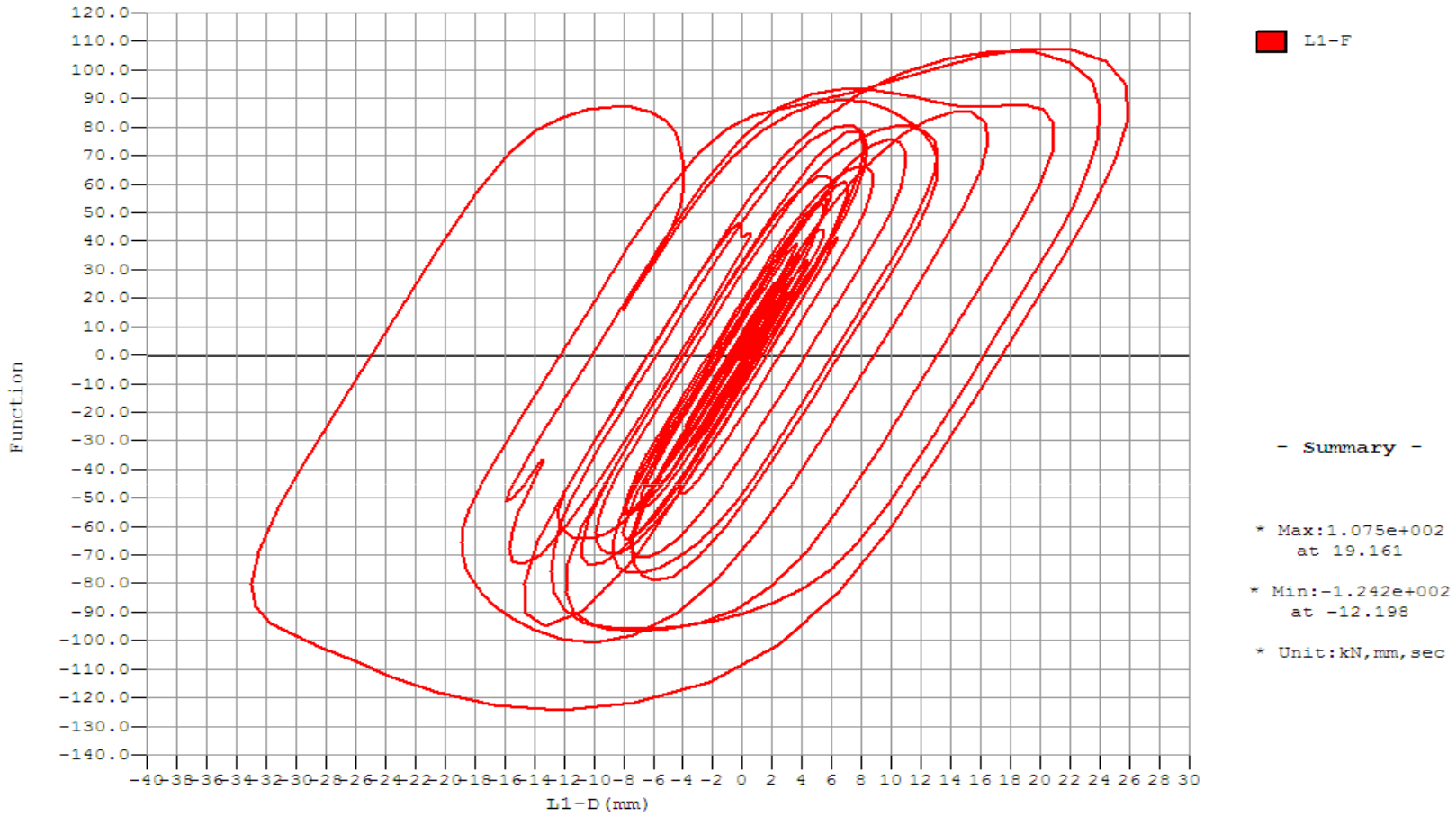


Damped frame



NTUT
NCREE

Damper 之遲滯迴圈



Unit: kN, mm

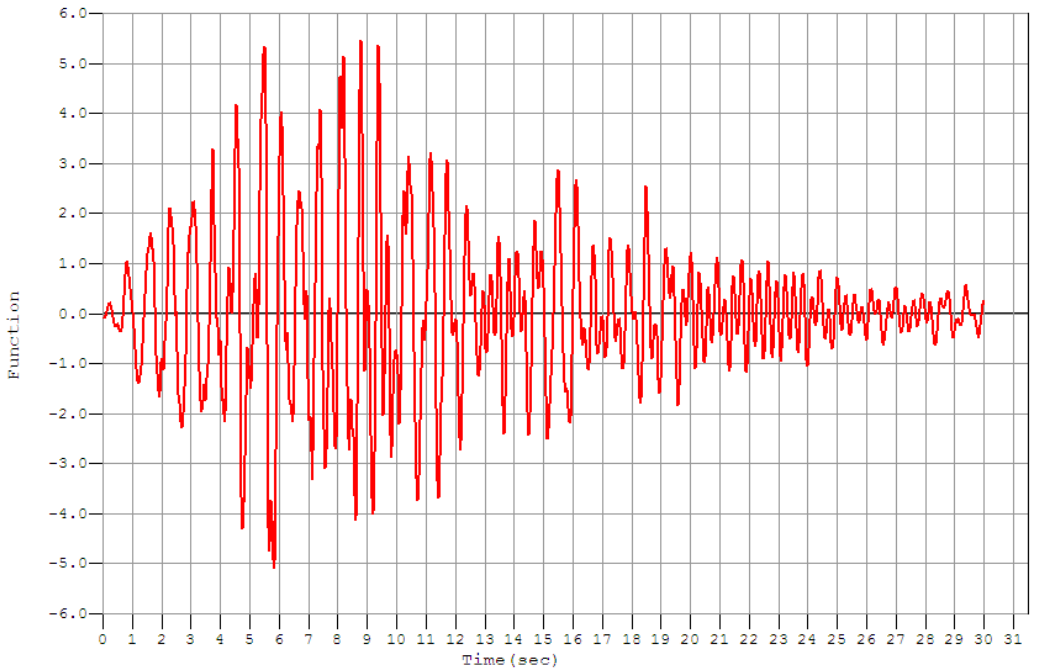
PGA =400 gal

位移量32 mm

=> 施工與斜撐構材精度要求高

NTUT
NCREE

屋頂加速度比較



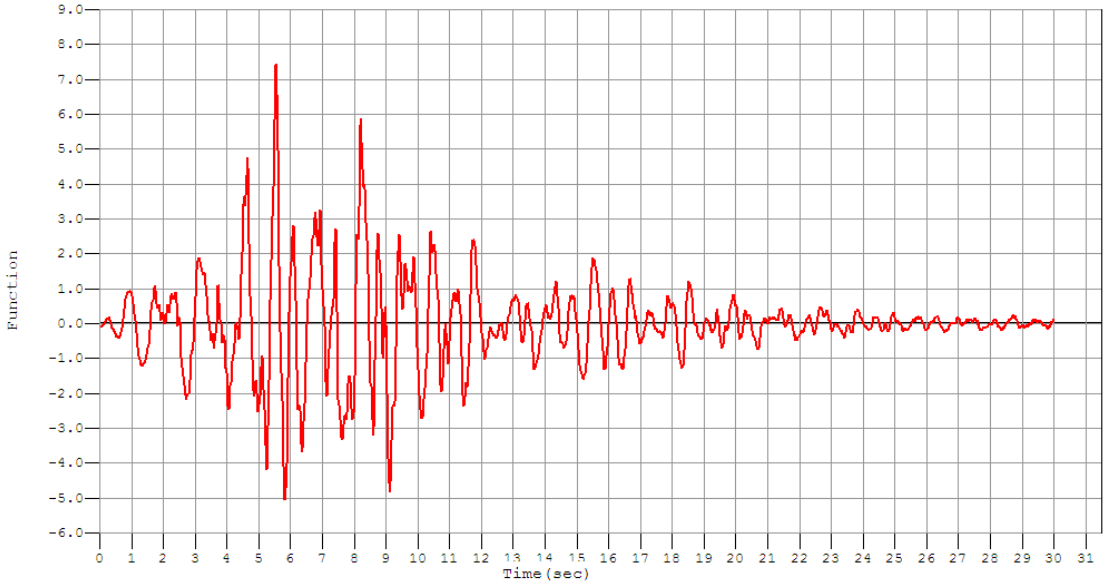
Damped frame

- Summary -

* Max:5.450e+000
at 8.780

* Min:-5.092e+000
at 5.820

* Unit:kN,m,sec



Bare frame

- Summary -

* Max:7.422e+000
at 5.560

* Min:-5.045e+000
at 5.840

* Unit:tonf,m,sec

NTUT
NCREE

加裝Viscous Damper 反應分析

阻尼器特性:

$F = 240\ V^{0.3}$

F= 阻尼力(KN, 最大出力約1400KN)

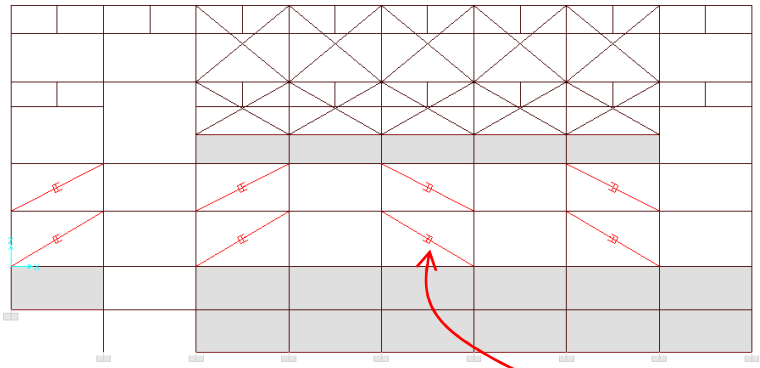
V=速度(mm/s)

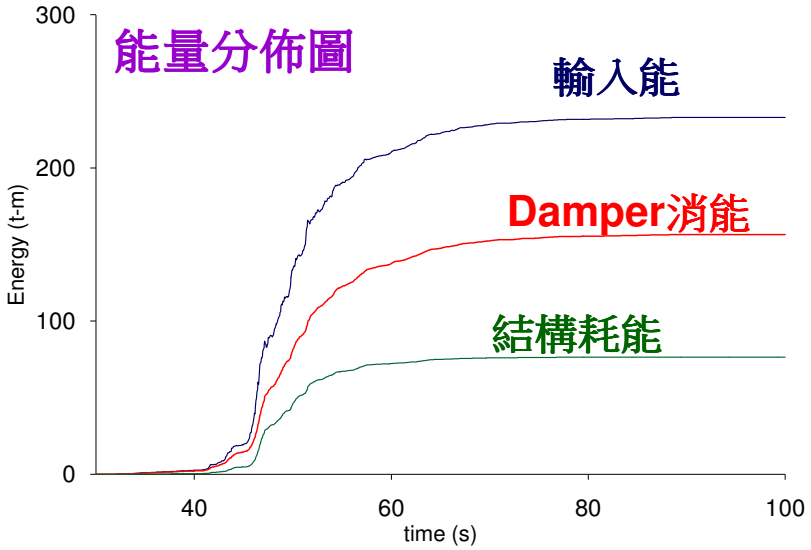
阻尼器配置:

X向及Y向兩側各8支; 共32支

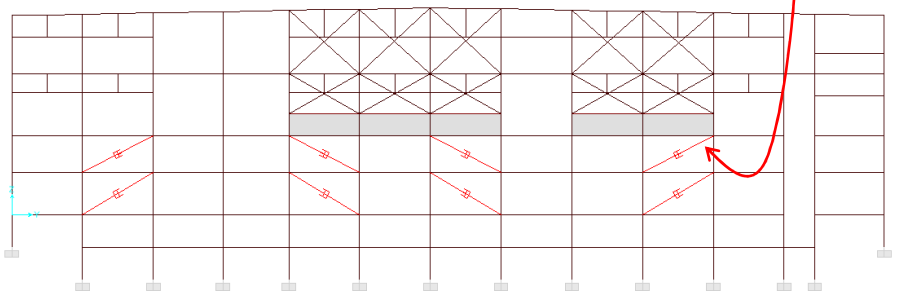
(有效阻尼比可提升約10%)

X(NS)向damper配置圖





Y(EW)向damper配置圖

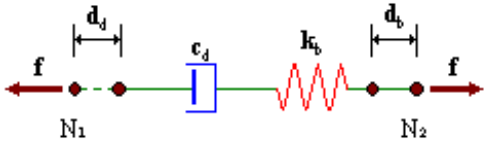


Viscous Damper 輸入

阻尼器特性:

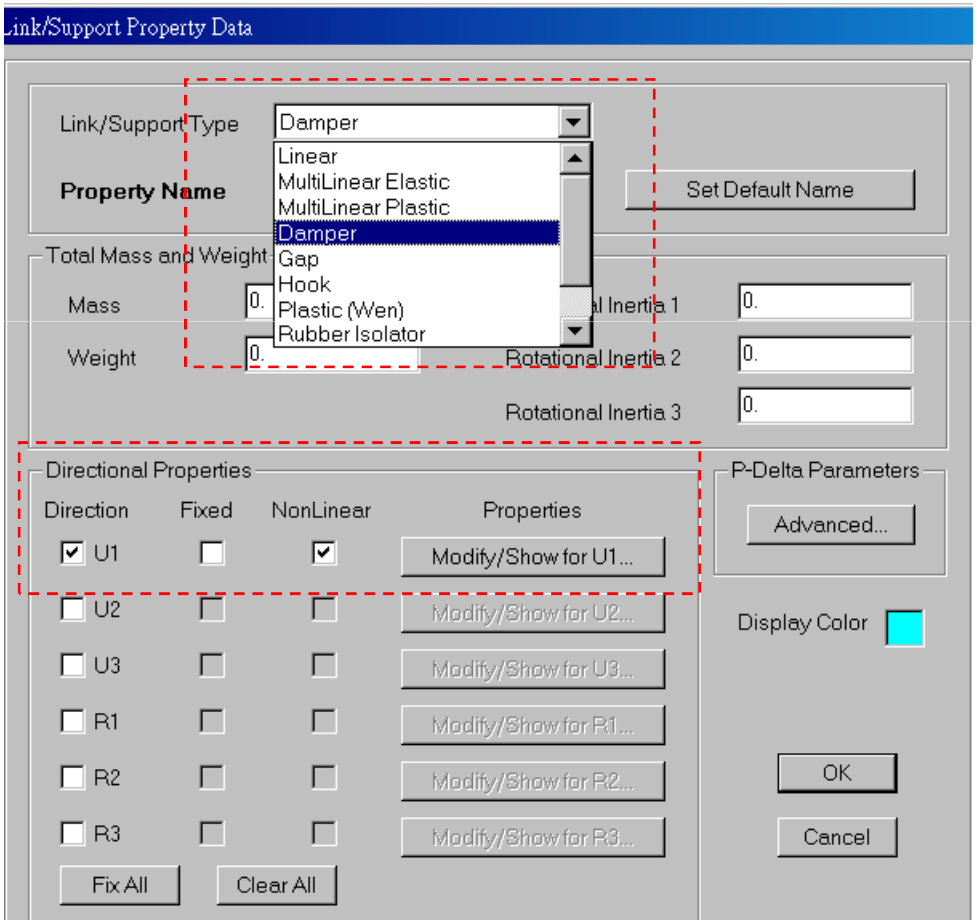
$F = 240\ V^{0.3}$;

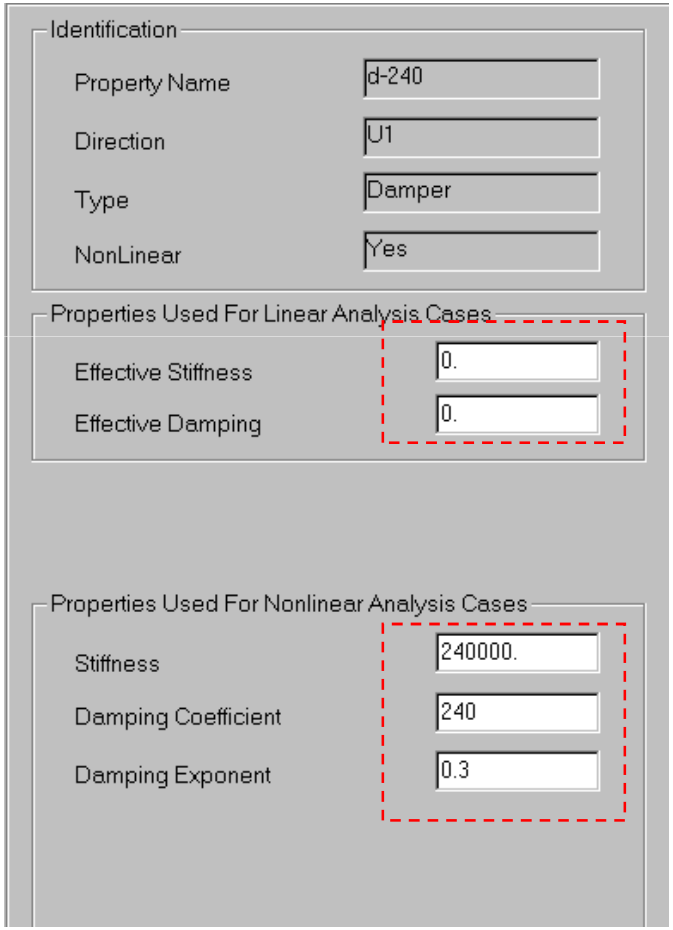
V=速度(mm/s)



單位選擇: KN, mm

阻尼器本身勁度

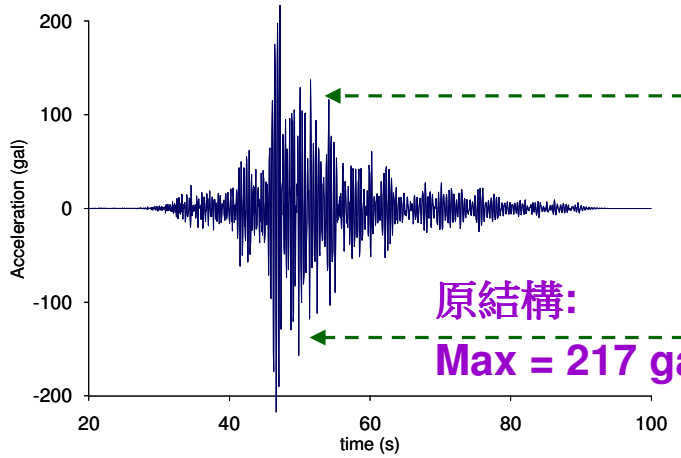




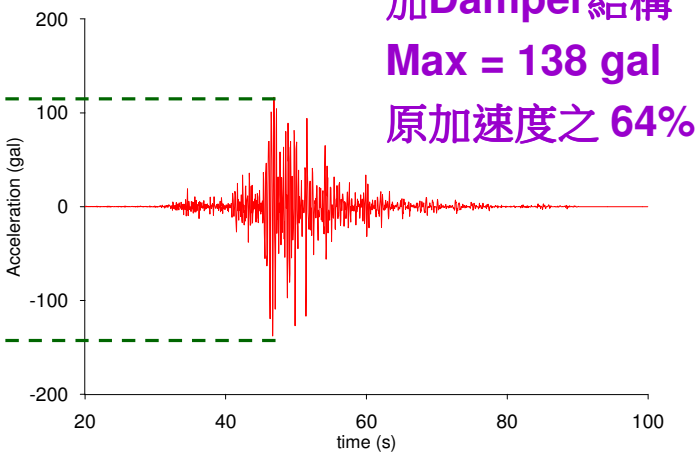
NTUT
NCREE

加裝Viscous Damper 前後加速度反應比較

NS向樓板加速度比較圖

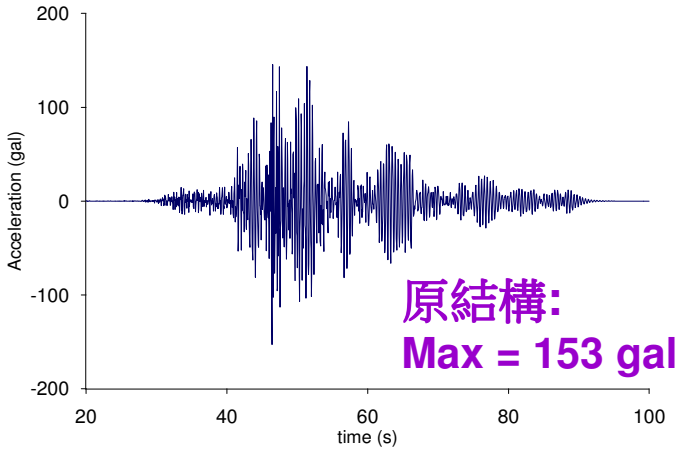


原結構:
Max = 217 gal

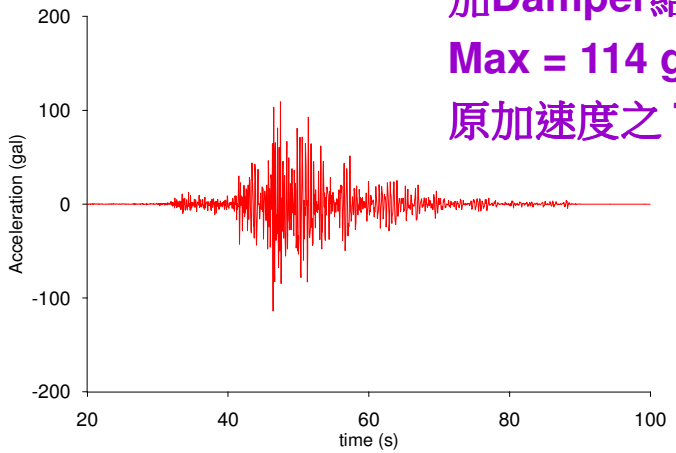


加Damper結構
Max = 138 gal
原加速度之 64%

EW向樓板加速度比較圖



原結構:
Max = 153 gal



加Damper結構
Max = 114 gal
原加速度之 74%

NTUT
NCREE

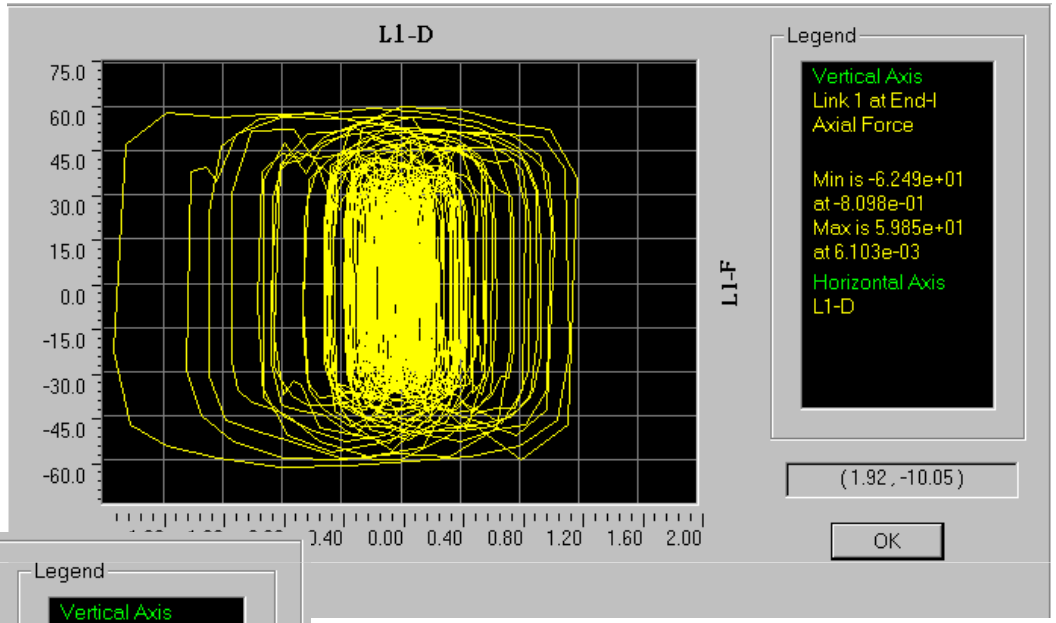
Viscous Damper 遲滯圈

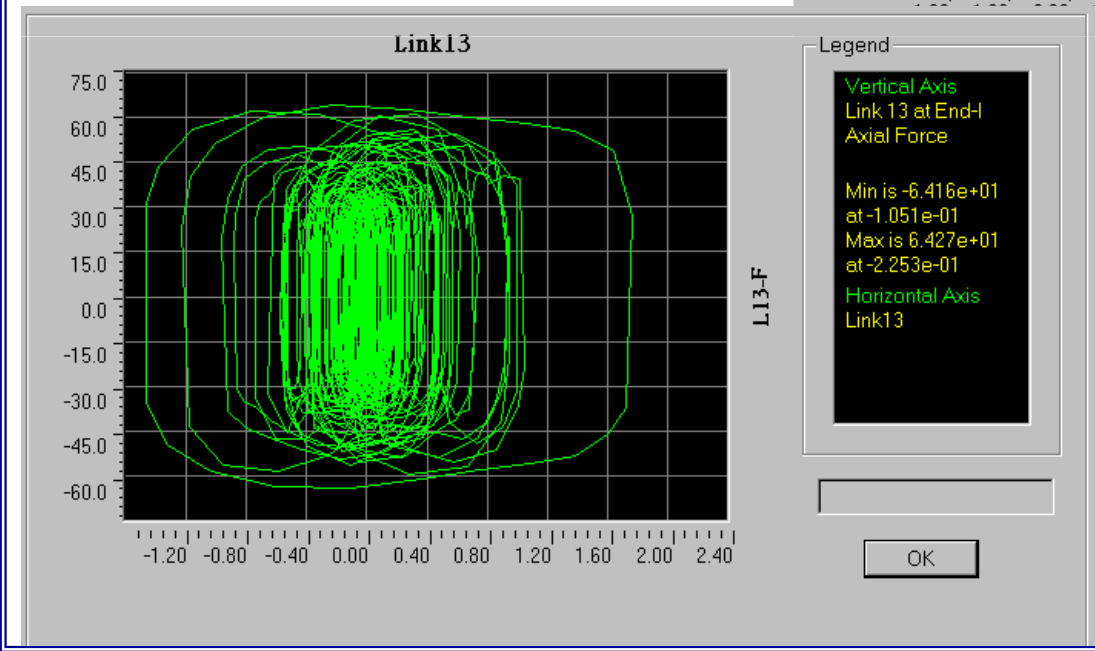
單位: t, mm

PGA =80 gal

位移量僅1.6 mm

=> 施工與斜撐構材精度要求高





NTUT
NCREE

本報告感謝黃震興教授及國家地震工程研究中心提供之寶貴資料

NTUT
NCREE



報告完畢 謝謝!